aparian

DH485 Router

Intelligent DH485 to EtherNet/IP Router

Route DH485 to Logix

1761-NET-AIC Migration

Program SLC5/03 over DH485 from EtherNet/IP

Interface PanelView Plus or PV800 to SLC5/03

Logix to SLC / MicroLogix

Supports Redundancy

Direct-to-Tag Technology

Built-In Packet Analyser

DIN Rail Mount

Easy to configure

The DH485 Router provides intelligent data routing between EtherNet/IP and Dh485 which can help simplify the migration from MicroLogix and SLC systems to ControlLogix or CompactLogix platforms, where a DH485 interface is required.



The module can also be used for remote programming or bridging between Ethernet and DH485.

The device makes use of the DH485 destination Node Address, (and Data File address in certain modes), to determine to which Logix controller the message should be routed. The mapping table, which can be configured in minutes, supports connections up to 8 Logix controllers.

The DH485 Router can also be used to program Rockwell Automation SLC5/03 controllers from Ethernet to DH485.

The DH485 Router can also be used to connect newer PanelView Plus and PanelView 800 devices to Rockwell Automation SLC5/03 controllers. This is especially useful with newer PanelView Plus devices (supporting only Ethernet) which needs to connect to controllers via DH485.

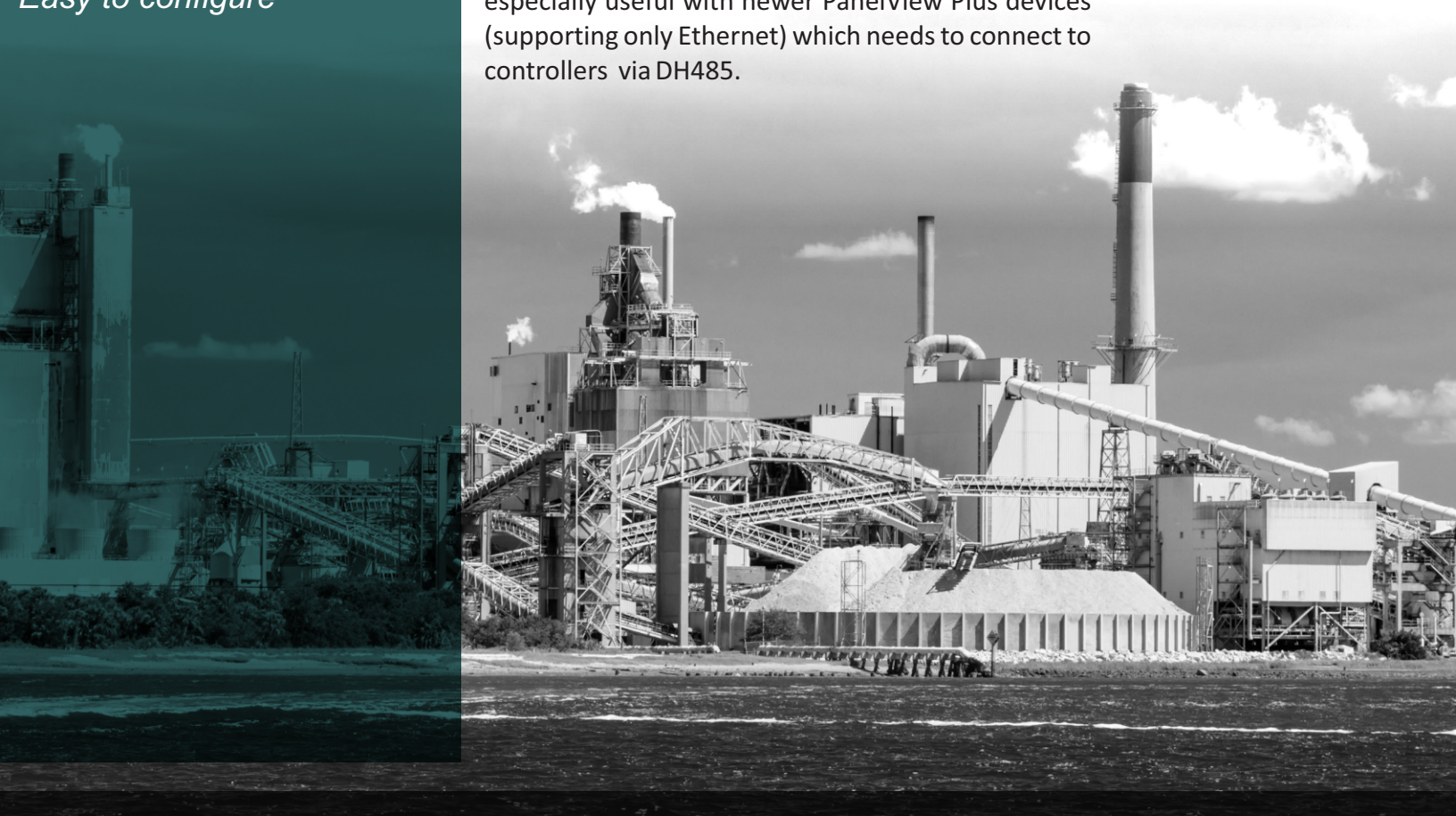

Transparent Mode

The DH485 Router will redirect DF1 PCCC messages to a Logix controller at a preconfigured EtherNet/IP path. Logix PLC Mapping configuration may also required.
This mode also supports remote programming using RSLogix 500.

Reactive Mode

Ithe DH485 Router will convert DF1 PCCC messages to Logix controller tag reads or tag writes.
No Logix PLC Mapping configuration is required.

Scheduled Mode

Tthe DH485 Router transfers data between a DH485 device and a number of Logix tags, using a preconfigured scheduled.
No Logix or remote device configuration is required.

Unscheduled Mode

The DH485 Router transfers messages received from a Logix Message Instruction.

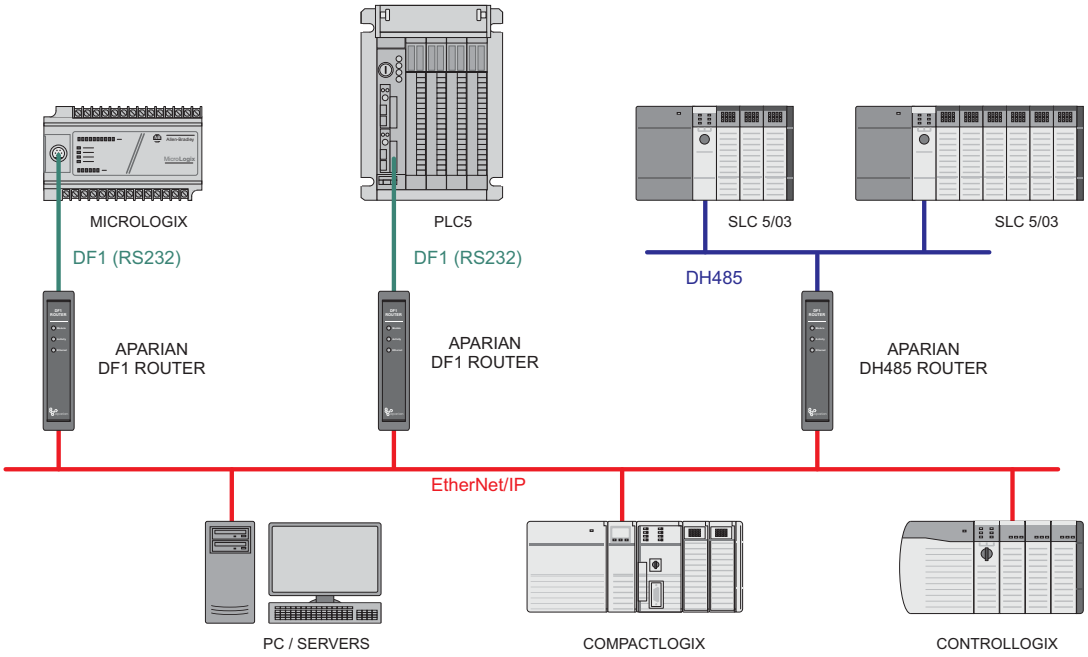

EtherNet/IP

c UL us LISTED
CL 1 DIV 2 GRP A,B,C,D
E494895

CE

Specifications

Parameter	Rating
Power requirements	10 - 28 VDC (70mA @ 24VDC)
Operating temperature	-20 - 70 °C
BAUD Supported	1200, 2400, 4800, 9600, 19200, 38400, 57600, 115200
Protocol - DH485	RS485 with CRC
Ethernet	10/100 Mbps, Full/Half Duplex, Auto-MIDX
Logix controller max	8
Mapping item max	20

DH485 Router
A-DH485R

Aparian Inc.

24 Twain Str
Irvine,
CA, 92617

Tel. (949) 445 4109
sales@aparian.com
www.aparian.com

aparian