HDLC Router

Master Broadcast Setup

Technical Application Note

A-HDLC

Document No. D118-015

01/2018

Revision 1.1

CONTENTS

1. Preface 2
   1.1. Purpose of this Document 2
   1.2. Additional Information 2
   1.3. Support 2
2. Application Description 3
3. Setup 4
   3.1. HDLC Cable wiring 4
   3.2. HDLC Router Setup 5
      3.2.1. Data Mapping 5
      3.2.2. HDLC Parameters 6
   3.3. Logix Setup 8
      3.3.1. Add Module to I/O Configuration 8
      3.3.2. Importing UDTs and Mapping Routines 10

aparian

1. PREFACE

1.1. PURPOSE OF THIS DOCUMENT

This document will assist the user to setup broadcast HDLC communication (with and without response) using the HDLC Router.

1.2. ADDITIONAL INFORMATION

The following resources contain additional information that can assist the user with the module installation and operation.

Resource	Link
Slate Installation	http://www.aparian.com/software/slate
HDLC Router User Manual HDLC Router Datasheet Example Code & UDTs	http://www.aparian.com/products/hdlcrouter
Ethernet wiring standard	www.cisco.com/c/en/us/td/docs/video/cds/cde/cde205_220_420/installation/guide/cde205_220_420_hig/Connectors.html
CIP Routing	The CIP Networks Library, Volume 1, Appendix C:Data Management

1.3. SUPPORT

Technical support will be provided via the Web (in the form of user manuals, FAQ, datasheets etc.) to assist with installation, operation, and diagnostics.

For additional support the user can use either of the following:

Contact Us web link	www.aparian.com/contact-us
Support email	support@aparian.com

2. APPLICATION DESCRIPTION

The Aparian HDLC Router can be configured as a Master to communicate with various devices by sending broadcast messages. Below are example diagrams of the HDLC Router being used as a HDLC Master.

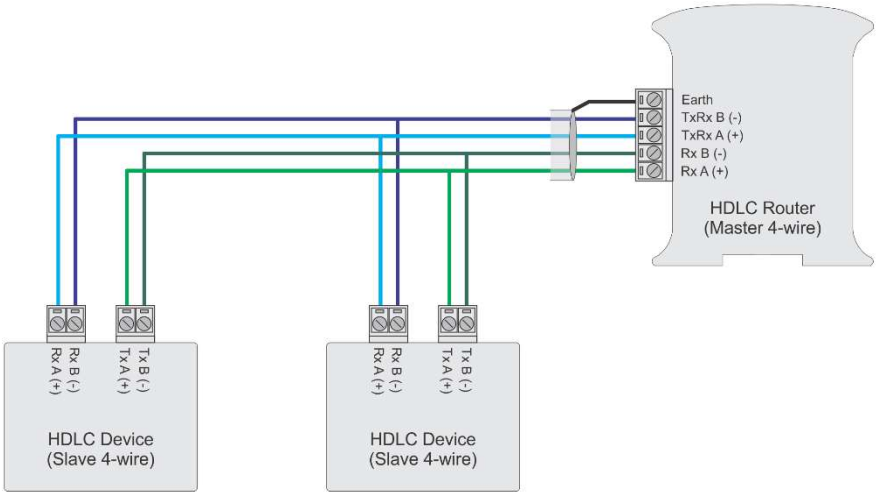

Figure 1 - HDLC Router as a 4-wire Master

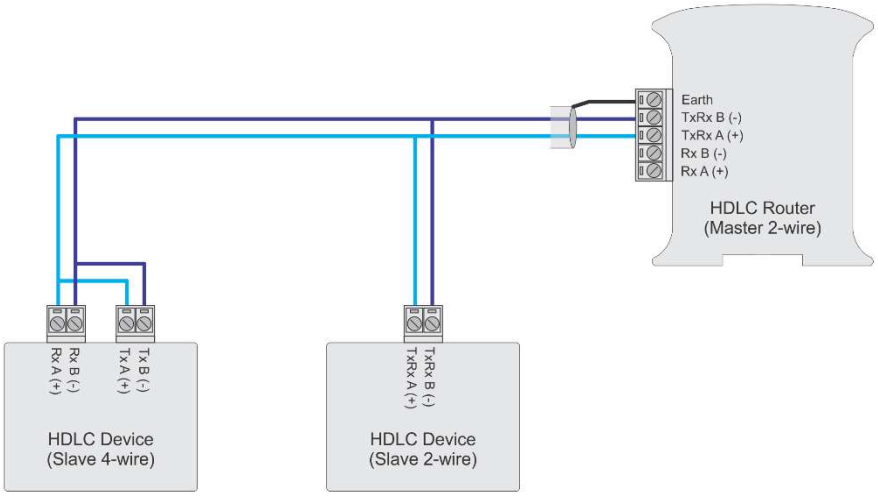

Figure 2 - HDLC Router as a 2-wire Master

When setup correctly the HDLC Router will broadcast messages to multiple slaves on the network.

3. SETUP

The following sections will describe the installation and configuration of the HDLC Router to assist the user with the initial setup.

3.1. HDLC CABLE WIRING

The HDLC cable pinout for 4-wire and 2-wire communication is shown in the figures below:

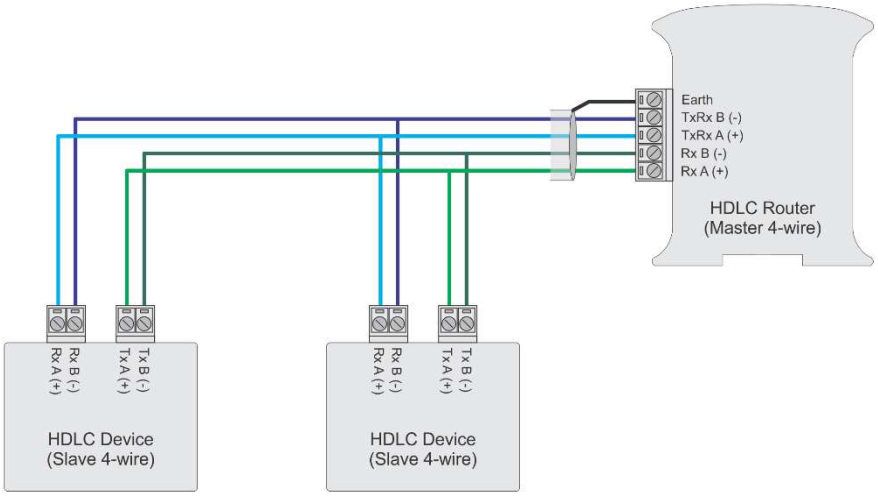

Figure 3 - HDLC Router as a 4-wire Master

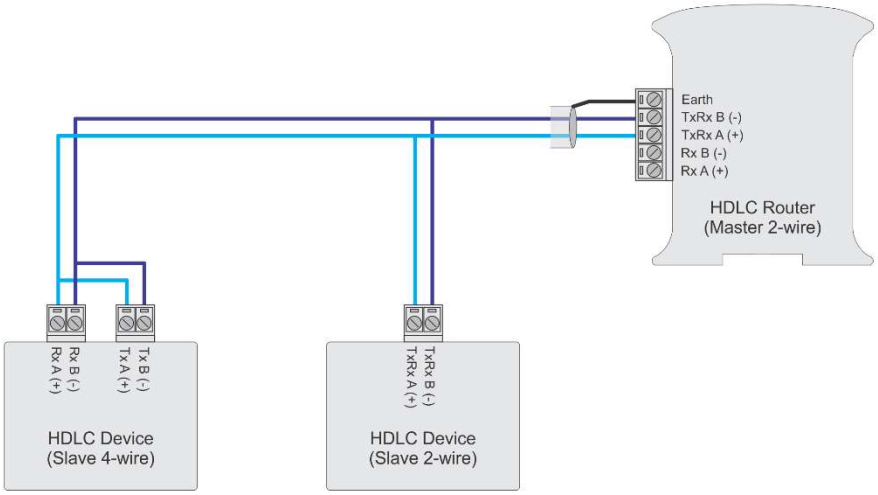

Figure 4 - HDLC Router as a 2-wire Master

3.2. HDLC ROUTER SETUP

3.2.1. DATA MAPPING

The HDLC Router must be configured for Broadcast communication by selecting the correct data to be exchanged on the network by the HDLC Router (in Master Mode). When the HDLC Router is configured as a Master with Broadcast interface, the user will need to duplicate the output mapping for each node in the mapping list (as shown below).

NOTE: When the HDLC Router is configured as a HDLC Master with broadcast communication (with and without response), Slate will allow the user to duplicate the output mapping for multiple devices to ensure the same data is sent to all devices on the network. All other HDLC parameter configuration combinations will not allow the user to have output mappings that overlap.

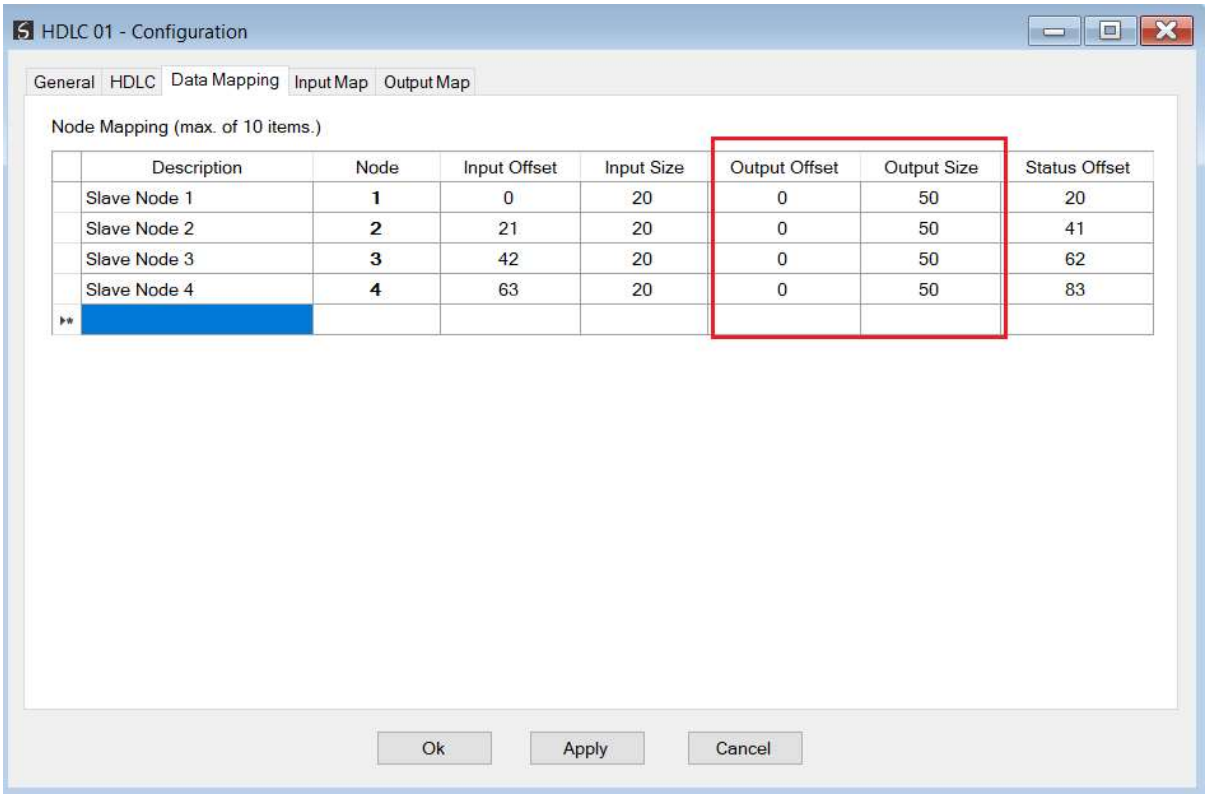

Figure 5 – HDLC Data Mapping (broadcast with response)

Duplicating the output mapping for each device will ensure the same data is broadcast to the network each time.

When using Broadcast without response the user must only have one item in the data mapping with Node 255 which will be sent to all devices (as shown below).

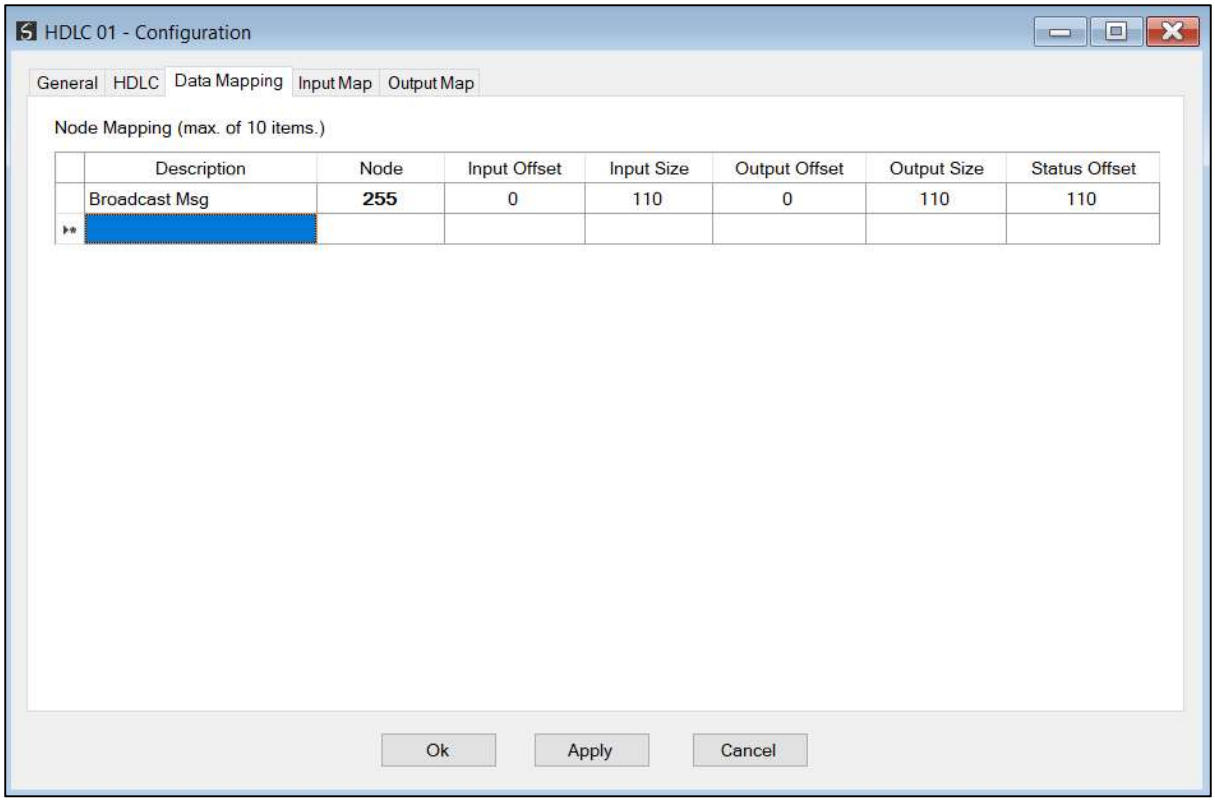

Figure 6 – HDLC Data Mapping (broadcast without response)

3.2.2. HDLC PARAMETERS

The HDLC parameters can be setup as shown in the figure below:

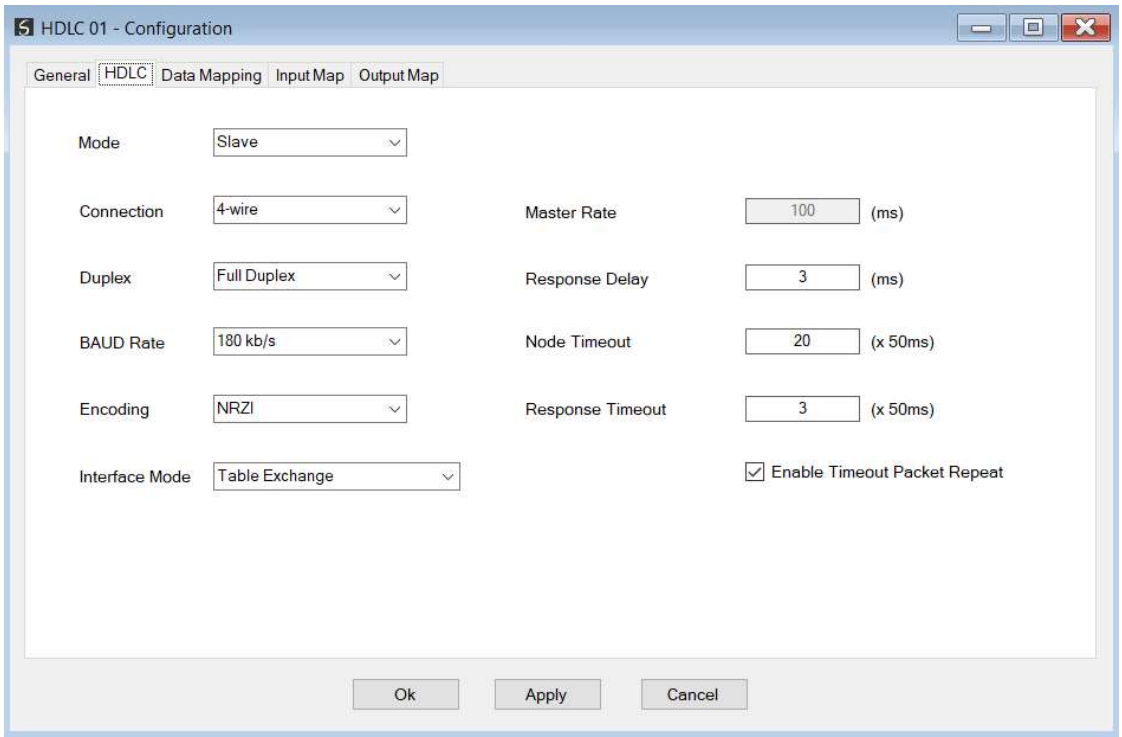

Figure 7 – HDLC Parameters

NOTE: The user must select either *Broadcast With Response* or *Broadcast Without Response* to enable the HDLC broadcast communication.

The HDLC communication configuration consists of the following parameters:

Parameter	Description
Mode	The mode in which the Router will operate, either: • **Master** – Initiating requests • **Slave** – Responding to requests
Connection	The physical topology for the HDLC (RS485) connection, either: • **2-wire** – Use 2-wire Tx and Rx multiplexed connection • **4-wire** – Use 4-wire with separate connections for Tx and Rx Refer to section 2.4 for information on the choices.
Duplex	The Duplex can be setup in one of the following two modes: • **Full Duplex** – When using point-to-point communication. • **Half Duplex** – When using multidrop communication. **NOTE:** When the HDLC Router is configured as a 4-wire HDLC Master in a multidrop slave network, then the communication duplex will still be setup as Full duplex. This is because the HDLC Master sends to all on one communication pair, while the HDLC Slaves share the return communication pair.
BAUD Rate	The BAUD rate to be used, either: • **48 kb/s** • **180 kb/s**
Encoding	The bit encoding method to be used, either: • **NRZI** – Non-return to zero inverse encoding • **FM0** – Biphase space encoding • **FM1** – Biphase mark encoding
Interface mode	The interface mode can be set to either of the following: • **Table Exchange** • **Broadcast with Response** • **Broadcast without Response**
Master Rate	The rate at which the module send requests when in master mode, expressed in milliseconds.

Response Delay	When in Slave mode, this is the time delay (milliseconds) between when a request is received and the reply is sent. In Master mode, this defines the time (milliseconds) between when a request is received before the next request is sent.
Node Timeout	The amount of time of inactivity for a specific node before the node is declared offline (de-active). The time is expressed in multiples of 50ms.
Response Timeout	The time in milliseconds the HLDC Router waits when there is no communication on the HDLC bus.
Enable Timeout Packet Repeat	When enabled the HDLC Router will resend the last packet sent when the Response Timeout is reached.

Table 1 – HDLC communication configuration parameters

3.3. LOGIX SETUP

The HDLC Router exchanges data with a Logix controller via Class 1 input and output assemblies. Thus, the HDLC Router must be added to the Logix IO tree to receive and send data to the GEM80 controller.

3.3.1. ADD MODULE TO I/O CONFIGURATION

Adding the module to the Logix IO tree makes use of the generic Ethernet module profile. This is done by right clicking on the Ethernet Bridge in the RSLogix 5000 and selecting *New Module* after which the *ETHERNET-MODULE* is selected to be added as shown in the figure below.

NOTE: See the next section for importing the configuration (L5X).

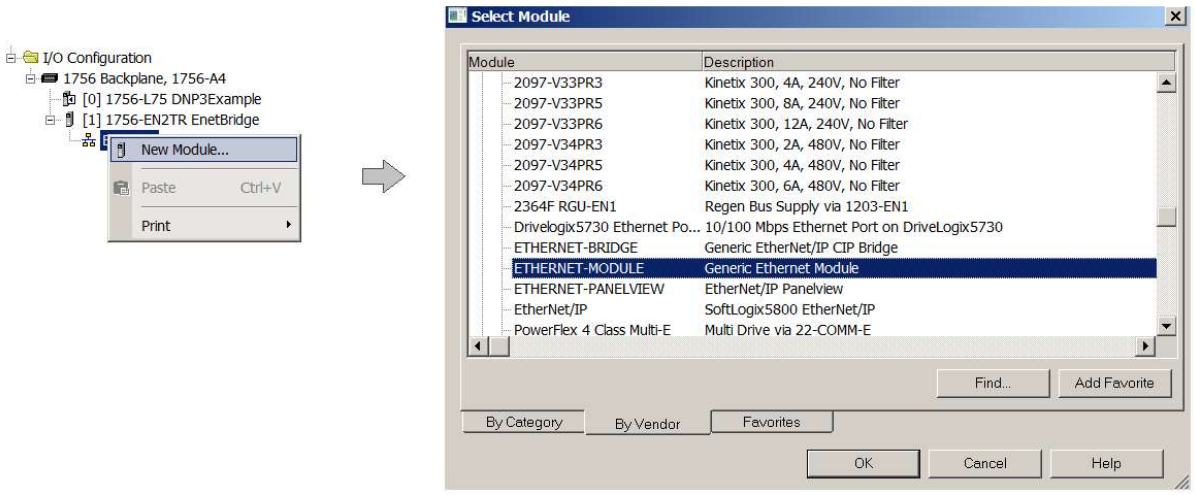

Figure 8 - Add a Generic Ethernet Module in RSLogix 5000

The user must enter the IP address of the HDLC Router that will be used. The assembly instance and size must also be added for the input, output, and configuration in the connection parameters section. Below are the required connection parameters.

Connection Parameter	Assembly Instance	Size
Input	119	480 (8-bit)
Output	120	396 (8-bit)
Configuration	102	0 (8-bit)

Table 2 - RSLogix class 1 connection parameters for the HDLC Router

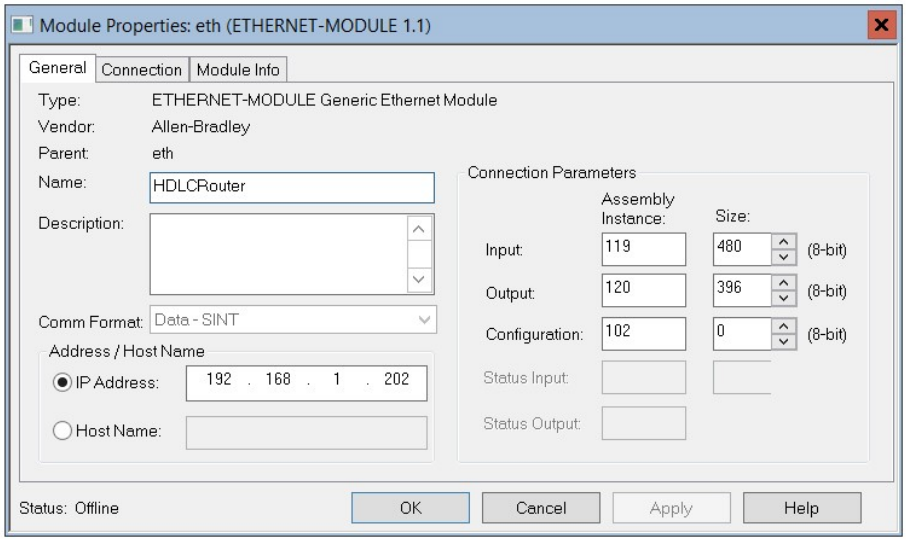

Figure 9 - General module properties in RSLogix 5000

NOTE: The user will need to enter the exact connection parameters before the module will establish a class 1 connection with the Logix controller.

Next the user needs to add the connection requested packet interval (RPI). This is the rate at which the input and output assemblies are exchanged. The recommended value is 10ms. Refer to the technical specification section in this document for further details on the limits of the RPI.

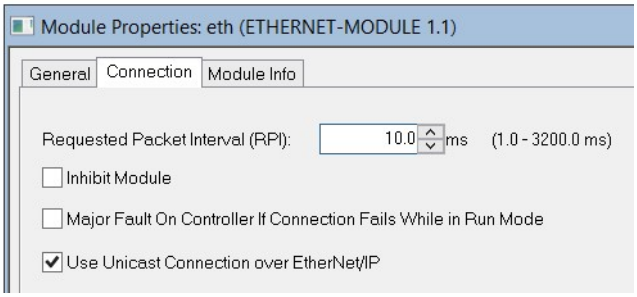

Figure 10 - Connection module properties in RSLogix 5000

Once the module has been added to the RSLogix 5000 IO tree the user must assign the User Defined Types (UDTs) to the input and output assemblies. The user can import the required UDTs by right-clicking on *User-Defined* sub-folder in the *Data Types* folder of the IO tree and selecting *Import Data Type*. The assemblies are then assigned to the UDTs with a ladder copy instruction (COP) as shown in the figure below.

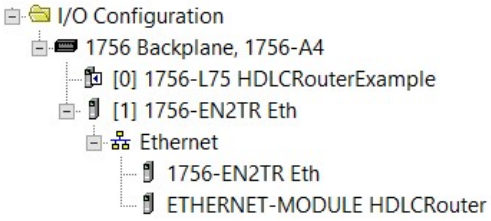

Figure 11 – RSLogix 5000 I/O module tree

3.3.2. Importing UDTs and Mapping Routines

To simplify the mapping of the input image, an RSLogix 5000 Routine Partial Import (L5X) file is provided. This file can be imported by right-clicking on the required Program and selecting the Import Routine option.

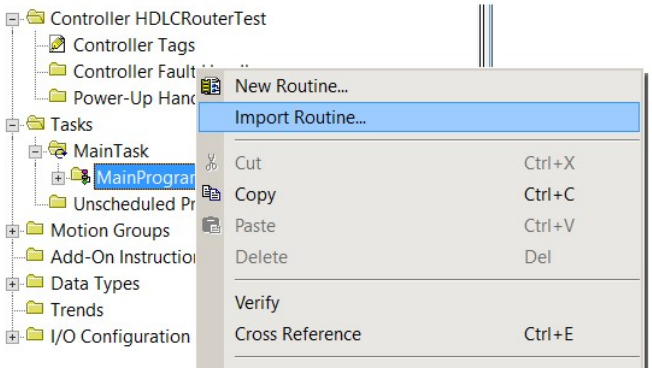

Figure 12 – RSLogix 5000 Importing HDLC Router specific routine and UDTs

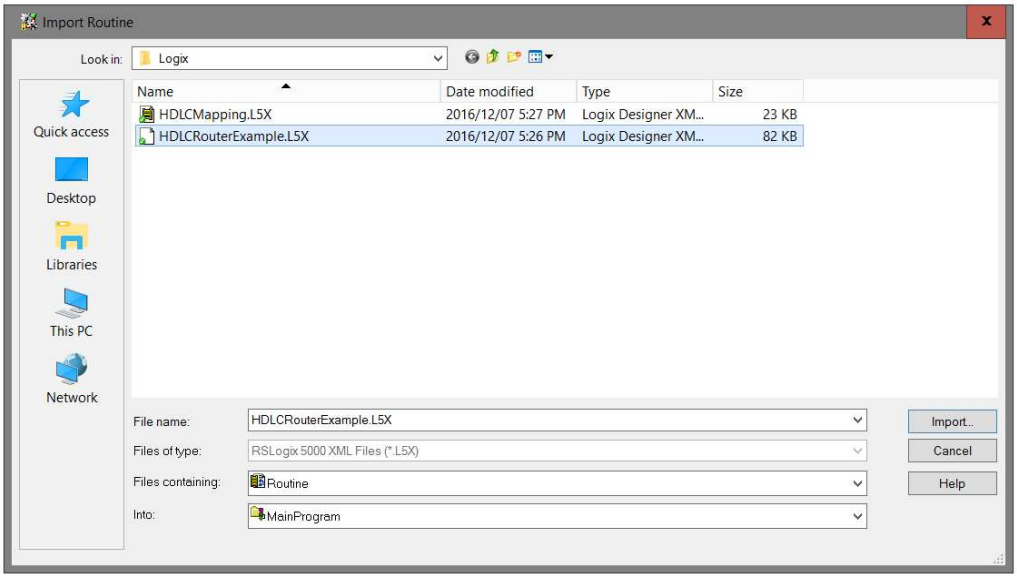

Figure 13 - Selecting partial import file

The import will create the following:

- The required UDTs (user defined data types)
- Two controller tags representing the Input and Output assemblies.
- A routine mapping the HDLC Router module to the aforementioned tags.

The user may need to change the routine to map to the correct HDLC Router module instance name, and make sure that the mapping routine is called by the Program's Main Routine.

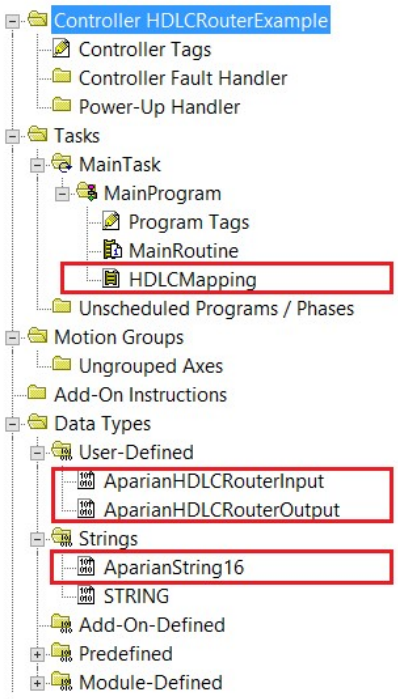

Figure 14 - Imported RSLogix 5000 objects

Refer to the additional information section of this document for an example RSLogix 5000 project as well as the required UDTs.