XPosition

Datasheet

A-XGPS

Document No. D108-010
11/2023
Revision 1.7

CONTENTS

1. Preface 2
   1.1. About this document 2
   1.2. Features 2
   1.3. Architecture 2
2. Ethernet/IP Network 5
3. Electrical Specifications 5
4. Certifications 6
5. Dimensions 7

aparian

1. PREFACE

1.1. ABOUT THIS DOCUMENT

This document contains the technical data for the XPosition. The XPosition provides an interface to high accuracy positioning equipment which can be used across a range of position sensitive applications.

1.2. FEATURES

The XPosition module provides a method for connecting high precision GPS and inertial navigation devices to Rockwell Automation's Logix (ControlLogix and CompactLogix) family of controllers.

The XPosition is configured using the Aparian Slate application. This program can be downloaded from www.aparian.com free of charge. Slate offers various configuration methods, including a controller tag browser.

Hereafter the XPosition module will be referred to as the **module**.

The module operates in a Logix "owned" mode. With a Logix connection the input and output assemblies will provide additional diagnostics information which will be available in the Logix controller environment.

The module uses an external GPS receiver to provide accurate position information. The external GPS or inertial navigation device provides various accuracy estimates allowing the user to make informed decisions for high precision position and velocity applications.

The XPosition can also be interfaced with dual antenna receivers and in so doing provide the additional Yaw, Tilt and Heading data.

A built-in webserver provides detailed diagnostics of system configuration and operation, including the display of GPS time, position, and velocity without the need for any additional software.

1.3. ARCHITECTURE

The figure below provides an example of the typical network setup.

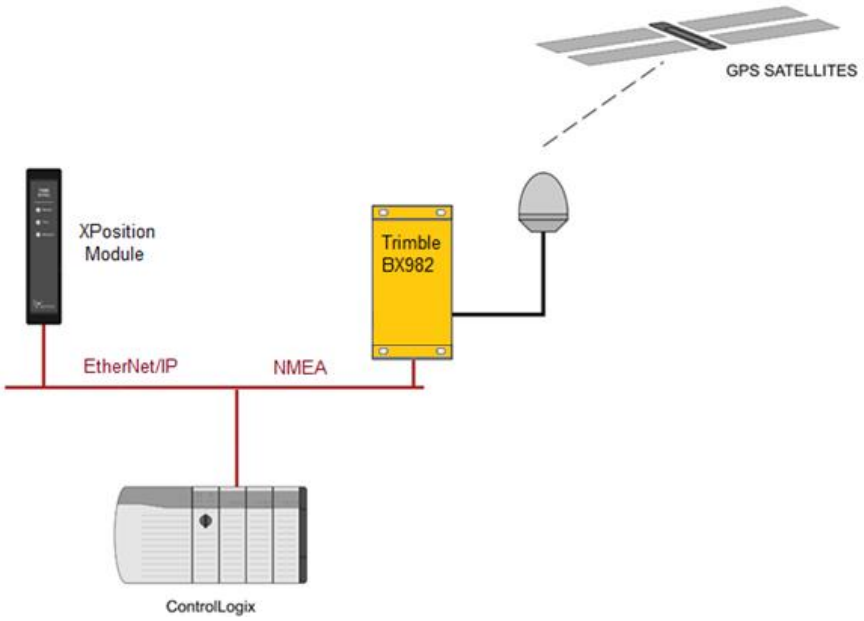

Figure 1 - Example of a typical network setup

The XPosition module will convert the data received from the high precision device (in this case the Trimble BX982) in order for the Logix controller to use it. The XPosition can also connect to the Logix controller or Precision GPS / Inertial navigation device over wireless networks allowing the user to accurately measure position of mobile applications (e.g. Cranes, Stackers, etc).

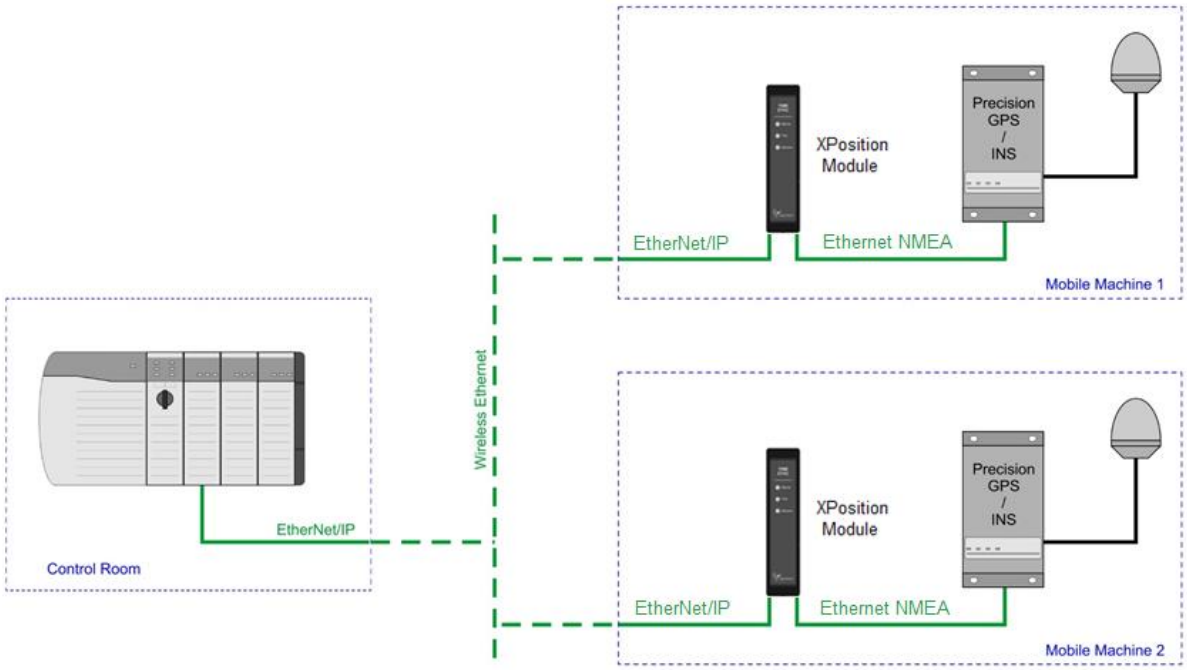

Figure 2 - Example of a wireless network setup

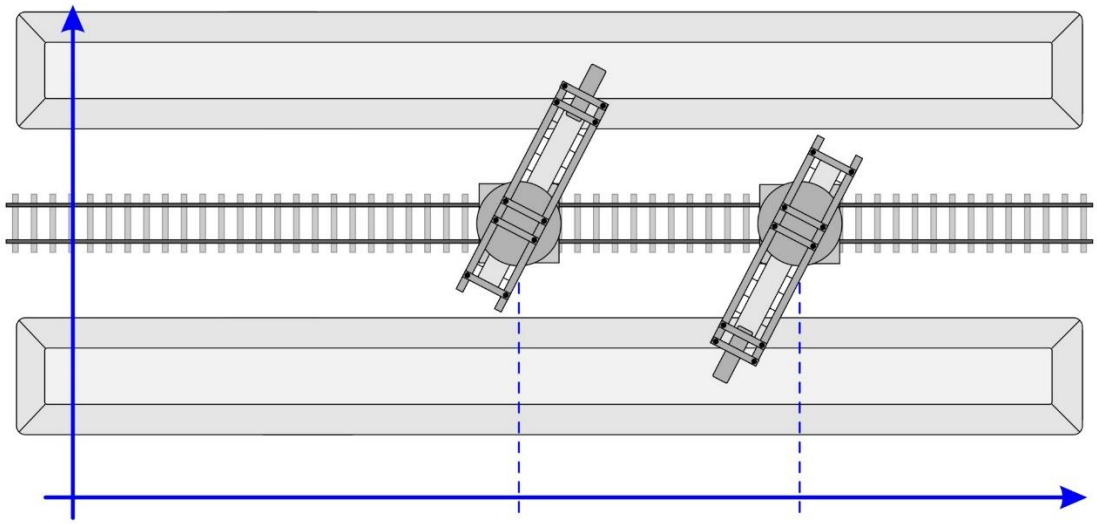

Figure 3 - Example of a wireless network setup

2. ETHERNET/IP NETWORK

Specification	Rating
Connector	RJ45
Conductors	CAT5 STP/UTP
ARP connections	Max 20
TCP connections	Max 20
CIP connections	Max 10
Communication rate	10/100Mbps
Duplex mode	Full / Half
Auto-MDIX support	Yes
Protocol Support	EtherNet/IP Modbus TCP

Table 1 - Ethernet specification

3. ELECTRICAL SPECIFICATIONS

Specification	Rating
Power requirements	Input: 10 – 28V DC, (70mA @ 24VDC)
Power consumption	1.7 W
Connector	3-way terminal
Conductors	24 – 18 AWG
Enclosure rating	IP20, NEMA/UL Open Type
Temperature	-20 – 70 °C
Earth connection	Yes, terminal based
Emissions	IEC61000-6-4
ESD Immunity	EN 61000-4-2
Radiated RF Immunity	IEC 61000-4-3
EFT/B Immunity	EFT: IEC 61000-4-4
Surge Immunity	Surge: IEC 61000-4-5

Conducted RF Immunity	IEC 61000-4-6

Table 2 - Electrical specification

4. CERTIFICATIONS

Certification	Mark
CE Mark	CE
UL Mark File: E494895	c UL us LISTED CLASS 1, DIV 2, GROUPS A, B, C, D
RoHS2 Compliant	RoHS2
RCM	
UKCA	UK CA

Table 4 – Certifications

5. DIMENSIONS

Below are the enclosure dimensions as well as the required DIN rail dimensions.

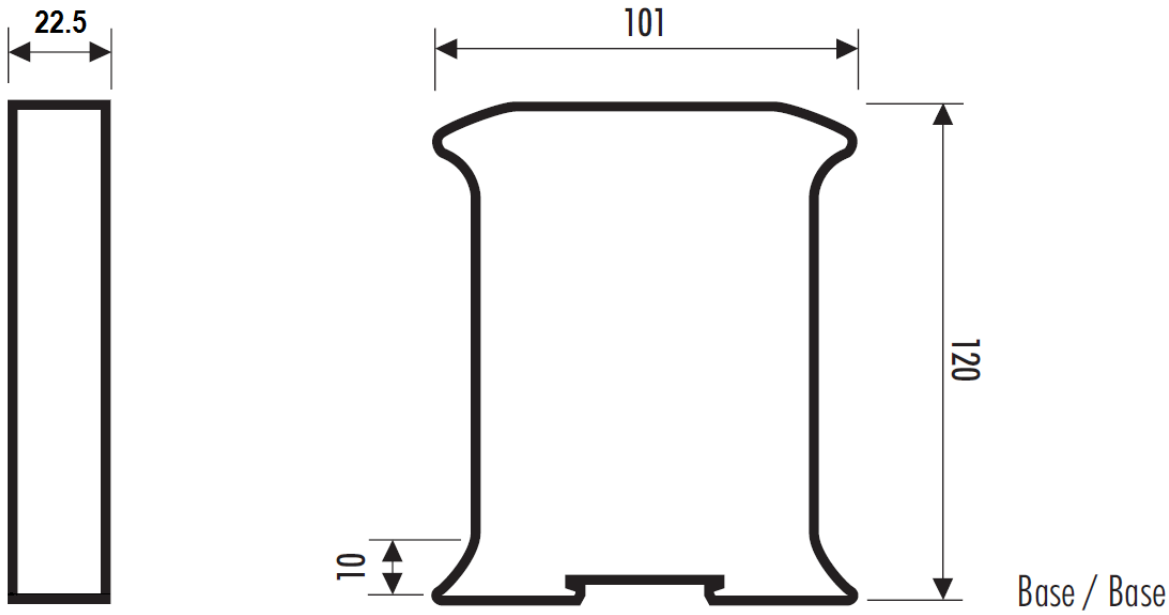

Figure 4 - XPosition enclosure dimensions

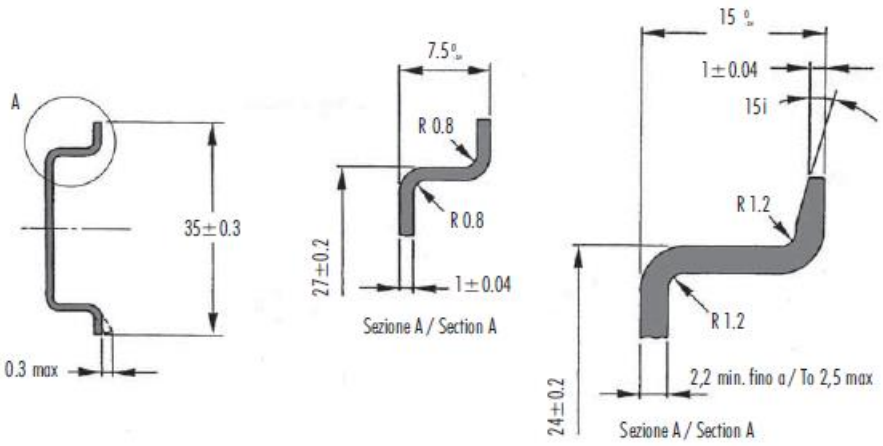

Figure 5 - Required DIN dimensions