IP Point HART

Quick Start Guide

A-IP.HART-I

A-IP.HART-O

NOTE: Before installing, configuring, operating, or maintaining Aparian products, please review this information and the information located on www.aparian.com for the latest software, documentation, and installation files specific to your Aparian product.

INTRODUCTION

The IP Point HART module can convert any analog device into either EtherNet/IP, Modbus-TCP, or DNP3 TCP/UDP, PCCC (AB-ETH), or CC-Link protocols. This includes 4 to 20 mA input and output devices with or without HART communications as well as 0 to 20 ma devices without HART.
The IP Point HART is available in Input or Output variations:

1) **A-IP.HART-I** for HART input devices like process instruments.
2) **A-IP.HART-O** for HART output devices like valve positioners.

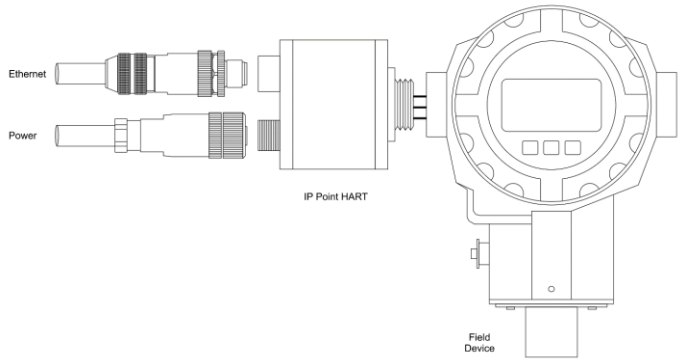

REQUIRED SOFTWARE

The IP Point HART modules requires Aparian Slate software to setup and configure. The software installation can be found at www.aparian.com/software/slate.

MODULE MOUNTING

The module is designed to screw directly into a field device using the industry standard M20 or NPT thread. The analog and earth wires are also pre-connected in the module simplifying installation.
To install the module, first remove the wiring cover of the field device. If the field device has a plastic cover on the M20 port, then remove that too. Feed the pre-connected wires (3) of the IP Point module through into the field device without terminating them. Then screw the module into the field device.

NOTE: It is important not to terminate the signal and earth wires before the module is screwed into the field device as this will cause the wires to twist excessively and may damage the internal connector.

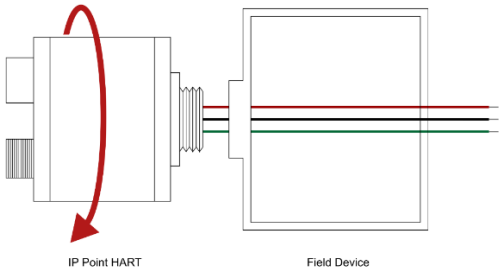

FIELD DEVICE CONNECTION

For **2-wire devices**, connect the power (red) wire to the field device positive and the signal (black) wire to the field device negative. Ensure that the 0V (blue) wire is not connected and suitably insulated (see below).

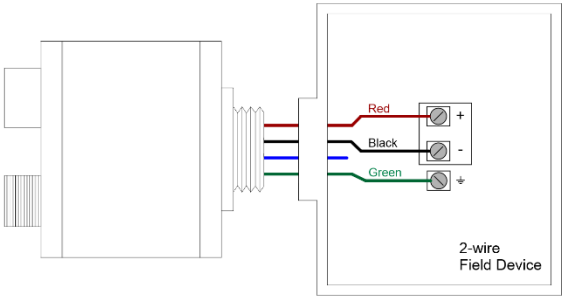

For **4-wire devices**, connect the signal (black) wire to the field device positive and the 0V (blue) wire to the field device negative. Ensure that the power (red) wire is not connected and suitably insulated (see below).

The earth (green) wire should be connected to the field device in both 2-wire and 4-wire configurations. The wires should be cut to a suitable length, so as to allow some slack in the field device, but not too much to prevent the cover from fitting on.

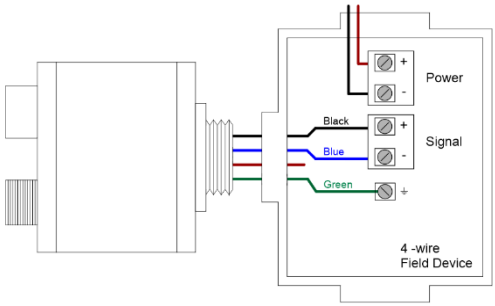

NOTE: The additional 0V (blue) wire, required for 4-wire field devices, is present only on devices shipped after January 2020.

The wiring of the power connector can be found in the wiring diagram below.

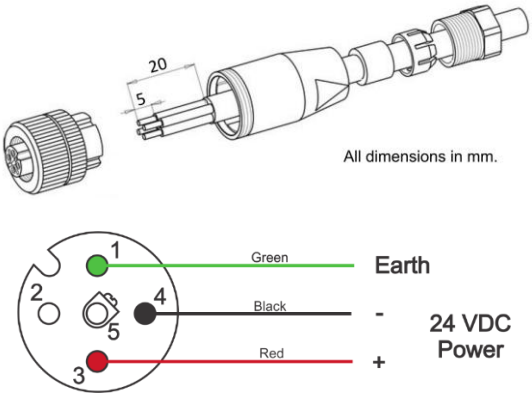

The wiring of the Ethernet connector can be found in the wiring diagram below.
Note that ethernet cable wire colors are not consistent. Use connector pin numbers to ensure correct cable functionality.

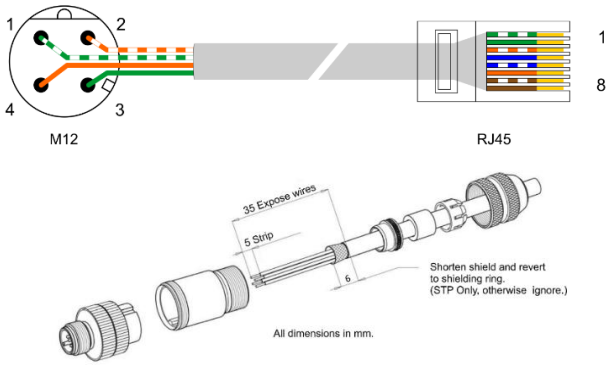

LED	Description
Ok	The LED will be green when the loop current is within the acceptable range (3.8mA to 20.5 mA) and HART communication has been established to the field device. Otherwise the LED will be red. The LED will flash green each time a HART response was received from the connected field device. If there was a HART communication error (e.g. checksum failure) then the LED will flash red. **NOTE:** If the module has not yet been configured, the LED will be red.
Ethernet	The Ethernet LED will light up when an Ethernet link has been detected (by plugging in a connected Ethernet cable). The LED will flash when traffic is detected.

ELECTRICAL AND ENVIRONMENTAL

Specification	Rating
Power requirements	Input: 12 – 28V DC, 30mA @ 24 VDC – With no field device attached.

	52mA @ 24 VDC - With a field device at 22mA each. 50mA @12 VDC - With no field device attached. 72mA @ 12 VDC - With a field device at 22mA each.
Power consumption	0.8 W – With no field device attached. 1.4 W – With a field device at 22mA each. 1.7 W – With input channel shorted. (IP Point HART In)
Temperature	-20 – 70 °C

NORTH AMERICAN HAZARDOUS LOCATION APPROVAL

The following information applies when operating the product in hazardous locations:

SUITABLE FOR USE IN CLASS I, DIVISION 2, GROUPS A, B, C AND D HAZARDOUS LOCATIONS, OR NONHAZARDOUS LOCATIONS ONLY. -20°C to +70°C, T5A, Class 1, Div 2 Gps A, B, C, D
THIS EQUIPMENT IS OPEN-TYPE DEVICE AND IS MEANT TO BE INSTALLED IN AN ENCLOSURE SUITABLE FOR THE ENVIRONMENT SUCH THAT THE EQUIPMENT IS ONLY ACCESSIBLE WITH THE USE OF A TOOL.
WARNING - EXPLOSION HAZARD - DO NOT DISCONNECT EQUIPMENT WHILE THE CIRCUIT IS LIVE OR UNLESS THE AREA IS KNOW TO BE FREE OF IGNITABLE CONCENTRATIONS.
WARNING - EXPLOSION HAZARD - SUBSTITUTION OF ANY COMPONENT MAY IMPAIR SUITABILITY FOR CLASS I, DIVISION 2.



For professional users in the European Union
If you wish to discard electrical and electronic equipment (EEE), please contact your dealer or supplier for further information.



WARNING – Cancer and reproductive harm – www.p65warnings.ca.gov

ADDITIONAL INFORMATION

The following resources contain additional information that can assist the user with the module installation and operation.

Resource	Link
Slate Installation	http://www.aparian.com/software/slate
User Manual, Datasheet Example Code & UDTs	http://www.aparian.com/products/ippointhart
Ethernet wiring standard	www.cisco.com/c/en/us/td/docs/video/cds/cde/cde205_220_420/installation/guide/cde205_220_420_hig/Connectors.html
Slate Installation	http://www.aparian.com/software/slate

SUPPORT

Technical support will be provided via the Web (in the form of user manuals, FAQ, datasheets etc.) to assist with installation, operation, and diagnostics. For additional support the user can use either of the following:

Contact Us web link	www.aparian.com/contact-us
Support email	support@aparian.com