HART

Setup Multidrop Field Devices

Technical Application Note

A-IP.HART-I
A-IP.HART-O
A-HRT-4I
A-HRT-4O

Document No. D113-020
Document Revision 1.0
02/2018

CONTENTS

1. Preface 2
1.1. Purpose of this Document 2
1.2. Additional Information 2
1.3. Support 2
2. Application Description 3
3. Setup 4
3.1. Field Device connection 4
3.2. HART Module Setup 6
3.3. RSLogix Setup 8
3.3.1. Relay Messaging 8
3.3.2. Relay Messaging Example 10
4. ConsideraTions 14
4.1. Multidrop with Output Devices 14
4.2. Max Field Devices per Port 14

aparian

1. PREFACE

1.1. PURPOSE OF THIS DOCUMENT

This document will assist the user to setup Aparian's HART interface modules to allow multiple field devices on a single port/drop.

1.2. ADDITIONAL INFORMATION

The following resources contain additional information that can assist the user with the module installation and operation.

Resource	Link
Slate Installation	http://www.aparian.com/software/slate
User Manual, Datasheet Example Code & UDTs	http://www.aparian.com/products/ippointhart
User Manual, Datasheet Example Code & UDTs	http://www.aparian.com/products/hart4
Ethernet wiring standard	www.cisco.com/c/en/us/td/docs/video/cds/cde/cde205_220_420/installation/guide/cde205_220_420_hig/Connectors.html
HART Communication Foundation	http://en.hartcomm.org/

1.3. SUPPORT

Technical support will be provided via the Web (in the form of user manuals, FAQ, datasheets etc.) to assist with installation, operation, and diagnostics.

For additional support the user can use either of the following:

Contact Us web link	www.aparian.com/contact-us
Support email	support@aparian.com

2. APPLICATION DESCRIPTION

The Aparian HART products (IP Point HART In, IP Point HART Out, HART 4In, HART 4Out) supports multiple field devices on a single HART port allowing for more field devices per Aparian HART interface module.

NOTE: Even though the IP Point HART does support multidrop it is recommended to only use the HART 4 products for multidrop functionality because of the IP Point HART's direct to field device mechanical connection.

When using multidrop the user can instruct the Aparian HART module to use a specific HART node address of normal operation (used in the input assembly of the Logix class 1 connection) whilst the other devices on the drop will have their information retrieved using a Logix message instruction.

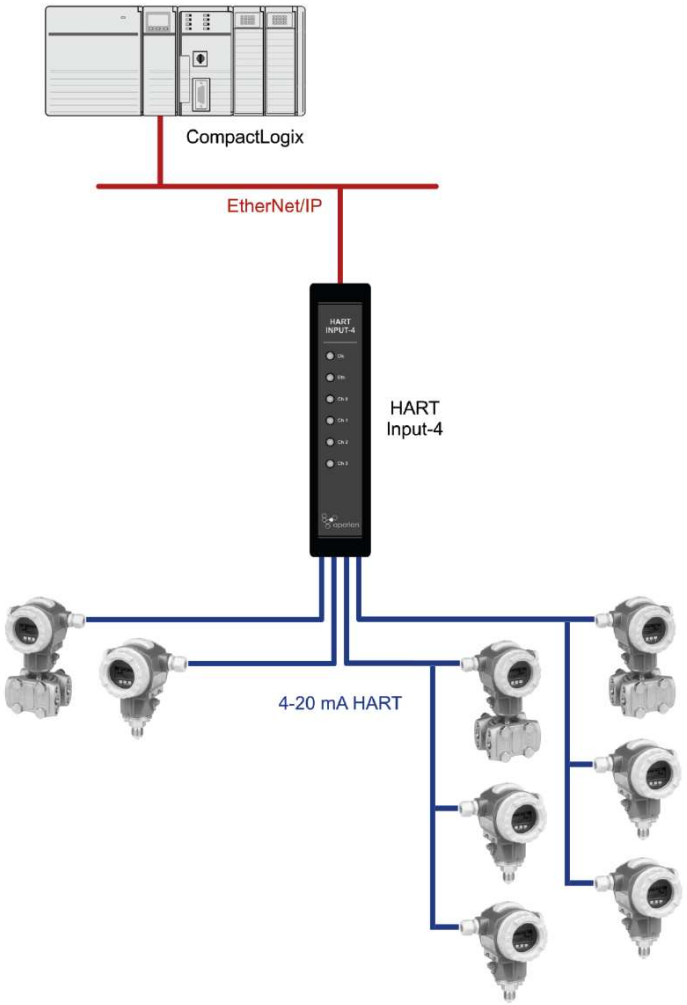

FIGURE 1 - EXAMPLE OF A MULTIDROP HART 4 NETWORK

3. SETUP

The following sections will describe the installation and configuration of all the required devices to assist the user with the initial setup.

3.1. FIELD DEVICE CONNECTION

The Analog HART channels are connected using a two-way connector. The input channels (A-HRT-4I) are internally loop powered and therefore can be connected directly to the field device signal terminals.

The output channels (A-HRT-4O) source the current directly and therefore can also be connected directly to the field device signal terminals. The input and output channels provide internal current limiting and electronic fuse protection.

In a multidrop setup the user will need to wire the field devices in series as shown below:

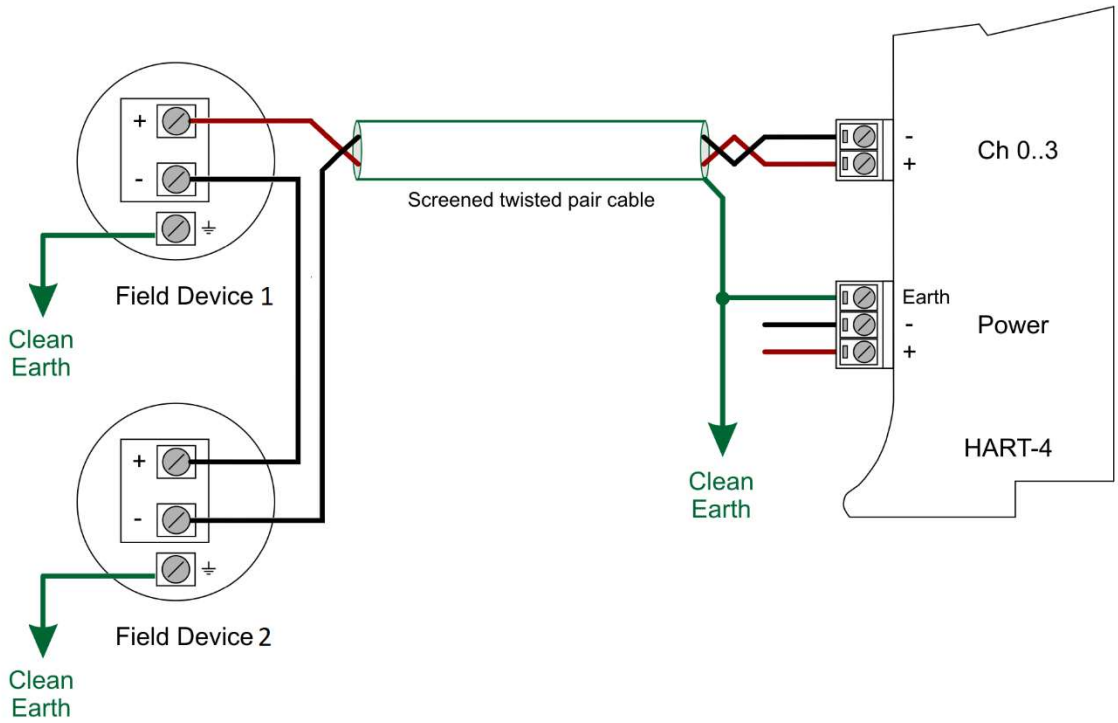

FIGURE 2 – HART4 MULTIDROP FIELD DEVICE WIRING

The equivalent Analog Input and Output circuits are shown below.

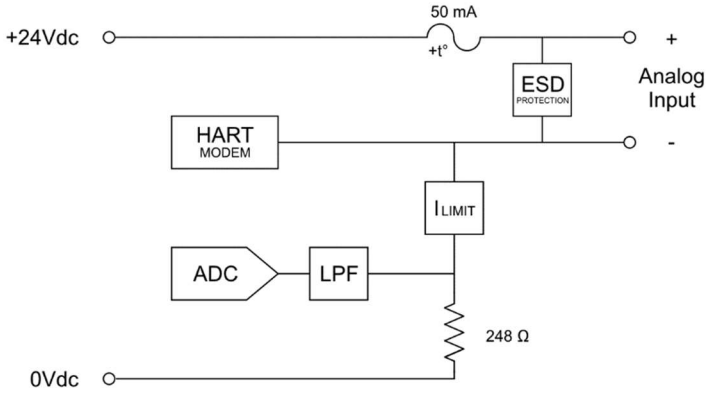

FIGURE 3 – ANALOG INPUT EQUIVALENT CIRCUIT

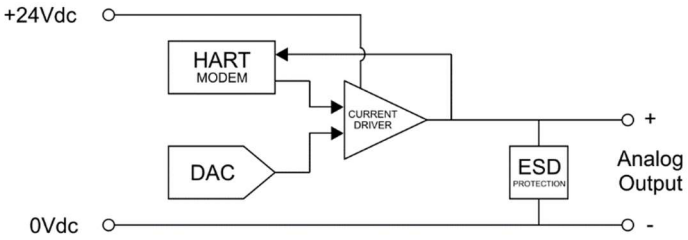

FIGURE 4 – ANALOG OUTPUT EQUIVALENT CIRCUIT

3.2. HART MODULE SETUP

The HART 4 or IP Point HART must be configured in Slate for normal, single device per port, operation except for the fixed address parameter. To ensure the correct field device is used as the “main” field device on the drop (which will be used to populate the Logix input assembly), the user will need to set the node address of the specific device. This is done by setting the fixed address in Slate as shown below:

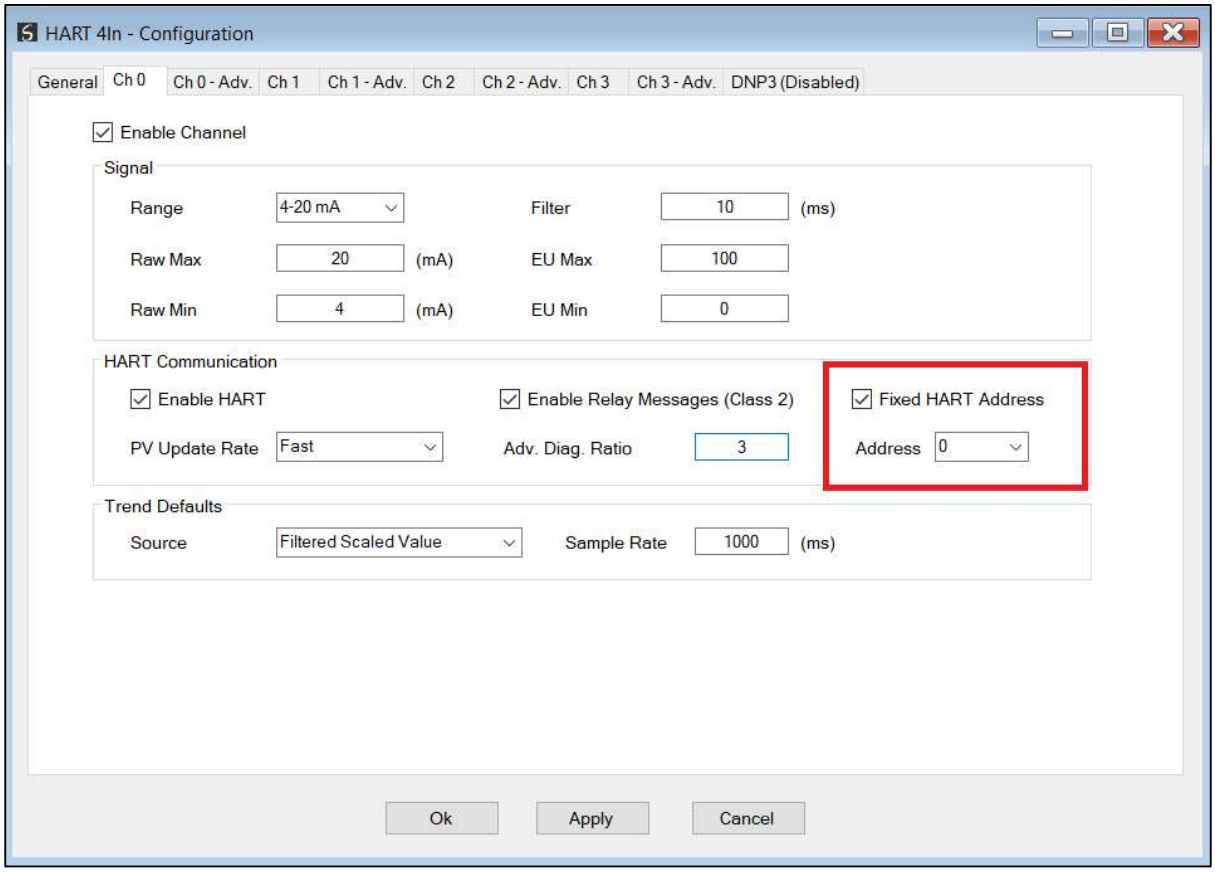

Figure 5 – Drop Fixed address

The user will need to ensure that each field device on the drop has a unique node address. This can be verified by doing a port scan and checking that each field device on the network has a unique node address (as shown below):

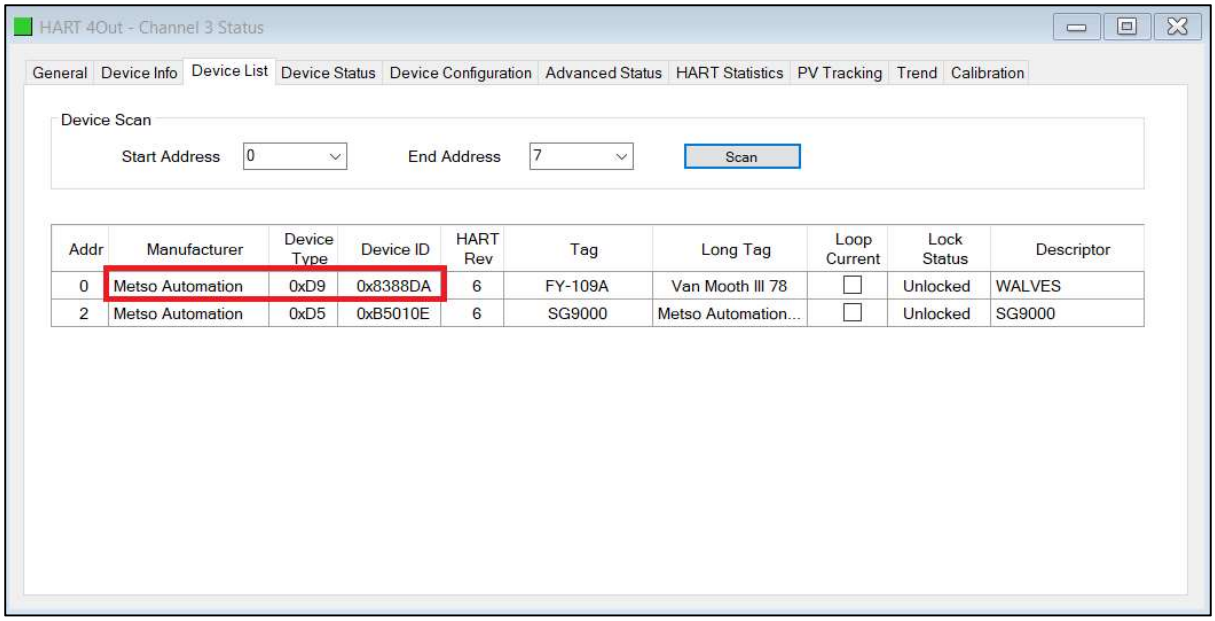

Figure 6 – Port Scan

If needed, the user can set the node address of a module from Slate as shown below:

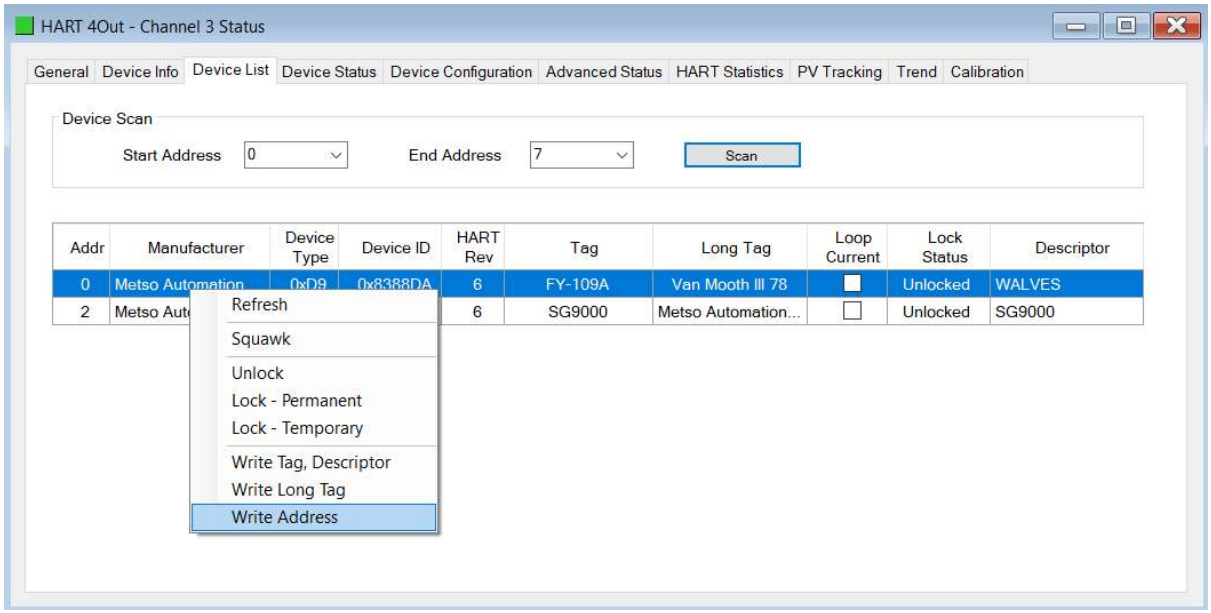

Figure 7 – Set Field Device Node Address

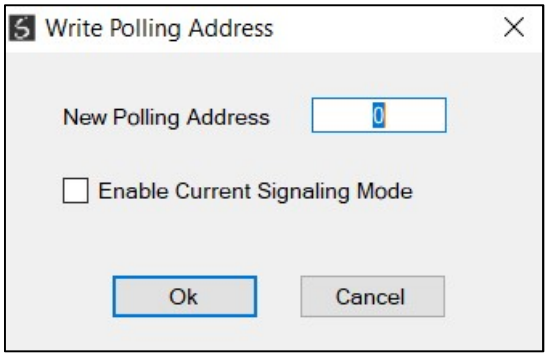

Figure 8 – Set Field Device Node Address

The user will also need to ensure that each field device on the drop has their loop current mode set to Multidrop and **NOT** Current Signalling Mode. This is done going to the write address option (as shown above) and setting the loop current mode in Slate as shown below:

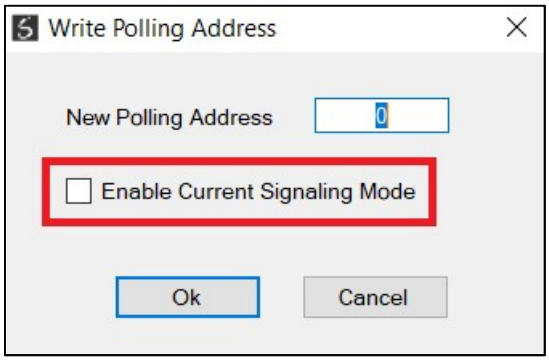

Figure 9 – Set Current Signalling Mode

3.3. RSLOGIX SETUP

3.3.1. RELAY MESSAGING

The module supports the relaying of custom HART commands to a field device. This is achieved by building the HART command request and then sending it to the module using an explicit message instruction. An example of this is shown in the figure below.

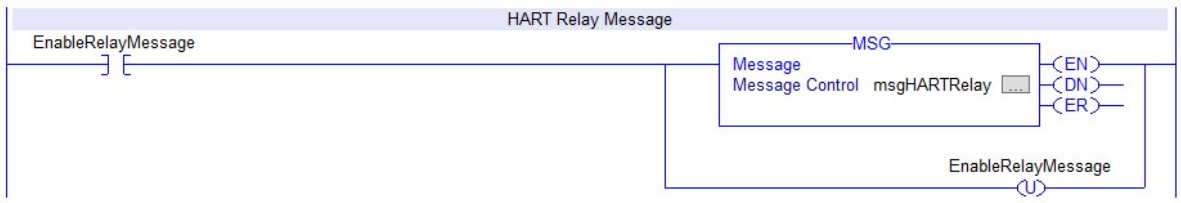

Figure 10 – Relay HART Message

The required attributes for the message instruction are as follows:

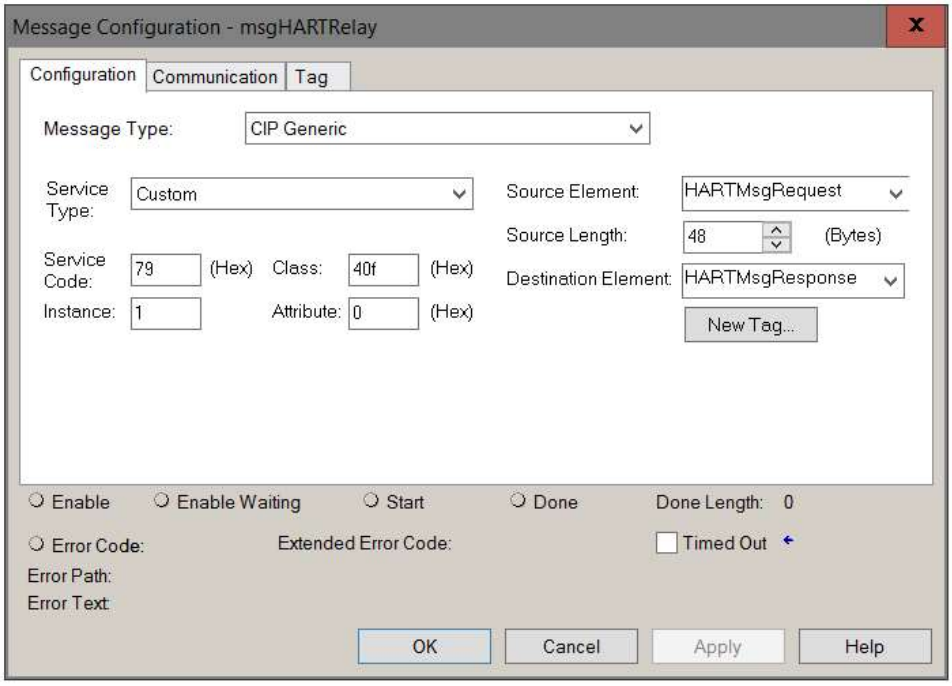

Figure 11 – Relay HART Message Configuration

Parameter	Value / Description
Message Type	CIP Generic
Service Type	Custom
Service Code	79 Hex (Relay HART Message service)
Class	40F Hex
Instance	Channel value + 1 1 for Channel 0 2 for Channel 1 3 for Channel 2 4 for Channel 3
Attribute	0
Source Element	Tag of type AparianHARTRelayMessageRequest
Source Length	48
Destination Element	Tag of type AparianHARTRelayMessageResponse

Table 1 – Relay HART Message Parameters

The required Request and Response HART Command structures are defined as follows:

HART Command Request		
Byte Offset	Data Type	Description
0	INT	Request Length
2	SINT	Start Character (0x82 for Long Address)
3	SINT	Long Address 0 (0x80 + Manufacturer ID)
4	SINT	Long Address 1 (Device Type Code)
5	SINT	Long Address 2 (Device ID Byte 0)
6	SINT	Long Address 3 (Device ID Byte 1)
7	SINT	Long Address 4 (Device ID Byte 2)
8	SINT	Command Code
9	SINT	Command Data Length (in bytes)
10	SINT[]	Command Data (If required)

Table 2 – Relay HART Message Request Structure

HART Command Response		
Byte Offset	Data Type	Description
0	INT	Status (See table below)
2	INT	Packet Length
4	SINT	Start Character
5	SINT	Long Address 0
6	SINT	Long Address 1
7	SINT	Long Address 2
8	SINT	Long Address 3
9	SINT	Long Address 4
10	SINT	Command Code (Echoed)
11	SINT	Reply Data Length
12	INT	Status (Same as at byte 0 above).
14	SINT[]	Command Reply Data

Table 3 – Relay HART Message Response Structure

3.3.2. Relay Messaging Example

In the example below a Logix message instruction is used to Read the Unique Identifier of the device. This makes use of the Universal Command #0. The field device is connected to channel 0, hence the Instance value set to 1.

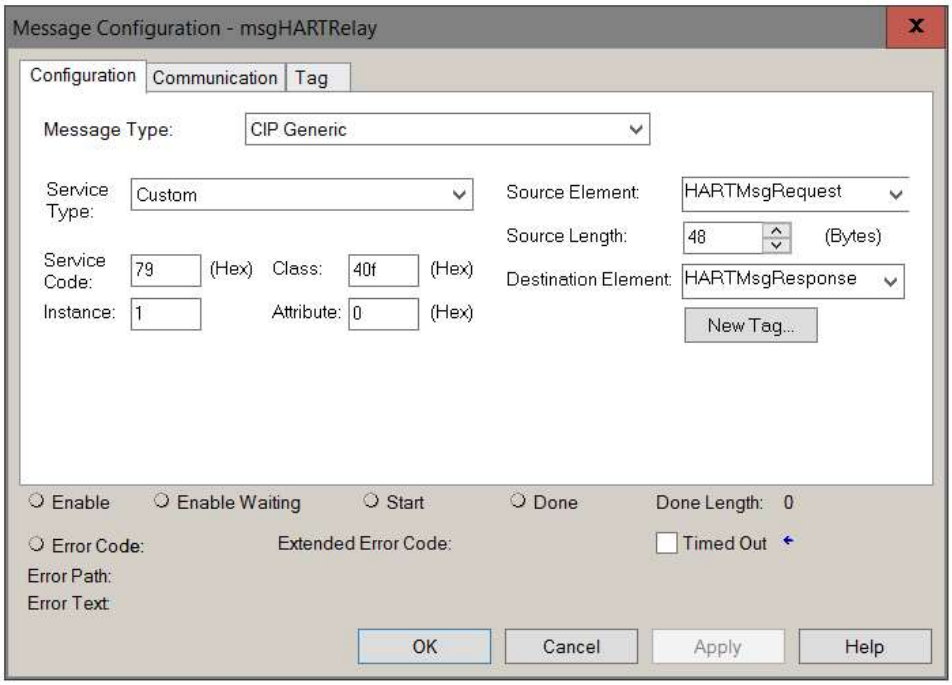

Figure 12 – Relay HART Message Example Configuration

HARTMsgRequest	{...}		AparianHARTRelayMessageRequest	
HARTMsgRequest.Length	8	Decimal	INT	Length = 8 bytes
HARTMsgRequest.StartCharacter	16#82	Hex	SINT	Start = 0x82 (Long Address)
HARTMsgRequest.AddressByte0	16#91	Hex	SINT	0x80 + ManufacturerID
HARTMsgRequest.AddressByte1	16#38	Hex	SINT	Device Type Code = 56 = 0x38
HARTMsgRequest.AddressByte2	16#79	Hex	SINT	DeviceID = 0xFF4F79
HARTMsgRequest.AddressByte3	16#4f	Hex	SINT	
HARTMsgRequest.AddressByte4	16#ff	Hex	SINT	
HARTMsgRequest.CommandData	{...}	Hex	SINT[40]	
HARTMsgRequest.CommandData[0]	16#00	Hex	SINT	Command = 0 Read Unique Identifier
HARTMsgRequest.CommandData[1]	16#00	Hex	SINT	Command Data Length = 0
HARTMsgRequest.CommandData[2]	16#00	Hex	SINT	Command Data (Not required for Cmd 0)
HARTMsgRequest.CommandData[3]	16#00	Hex	SINT	
HARTMsgRequest.CommandData[4]	16#00	Hex	SINT	
HARTMsgRequest.CommandData[5]	16#00	Hex	SINT	
HARTMsgRequest.CommandData[6]	16#00	Hex	SINT	

Figure 13 – Relay HART Command Example – Request

HARTMsgResponse	{...}		AparianHARTRelayMessageResponse	
HARTMsgResponse.Status	16#4000	Hex	INT	Status = 0x4000
HARTMsgResponse.PacketLength	32	Decimal	INT	
HARTMsgResponse.StartCharacter	16#86	Hex	SINT	Long Address
HARTMsgResponse.AddressByte0	16#91	Hex	SINT	
HARTMsgResponse.AddressByte1	16#38	Hex	SINT	
HARTMsgResponse.AddressByte2	16#79	Hex	SINT	
HARTMsgResponse.AddressByte3	16#4f	Hex	SINT	
HARTMsgResponse.AddressByte4	16#ff	Hex	SINT	
HARTMsgResponse.Command	0	Decimal	SINT	Command Echo
HARTMsgResponse.ByteCount	24	Decimal	SINT	Reply Length = 24
HARTMsgResponse.Data	{...}	Hex	SINT[50]	
HARTMsgResponse.Data[0]	16#00	Hex	SINT	Status = 0x4000 (repeated)
HARTMsgResponse.Data[1]	16#40	Hex	SINT	
HARTMsgResponse.Data[2]	16#fe	Hex	SINT	Command 0 Reply Data: Format 254
HARTMsgResponse.Data[3]	16#11	Hex	SINT	Command 0 Reply Data: ManufacturerID
HARTMsgResponse.Data[4]	16#38	Hex	SINT	Command 0 Reply Data: Device Type Code
HARTMsgResponse.Data[5]	16#05	Hex	SINT	Command 0 Reply Data: Number of Preambles
HARTMsgResponse.Data[6]	16#07	Hex	SINT	Command 0 Reply Data: Universal Cmd Rev
HARTMsgResponse.Data[7]	16#03	Hex	SINT	Command 0 Reply Data: Specific Cmd Rev
HARTMsgResponse.Data[8]	16#03	Hex	SINT	Command 0 Reply Data: Software Rev
HARTMsgResponse.Data[9]	16#08	Hex	SINT	Command 0 Reply Data: Hardware Rev

Figure 14 – Relay HART Command Example – Response

NOTE: The HART Long Address for a device is comprised of the Manufacturer ID, Device Type Code and Device ID. These values are displayed on the Channel Status screen in Slate when the device is Online.

In Multidrop operation the user will need to get the field device details from Slate using the scan and identify operation as shown below:

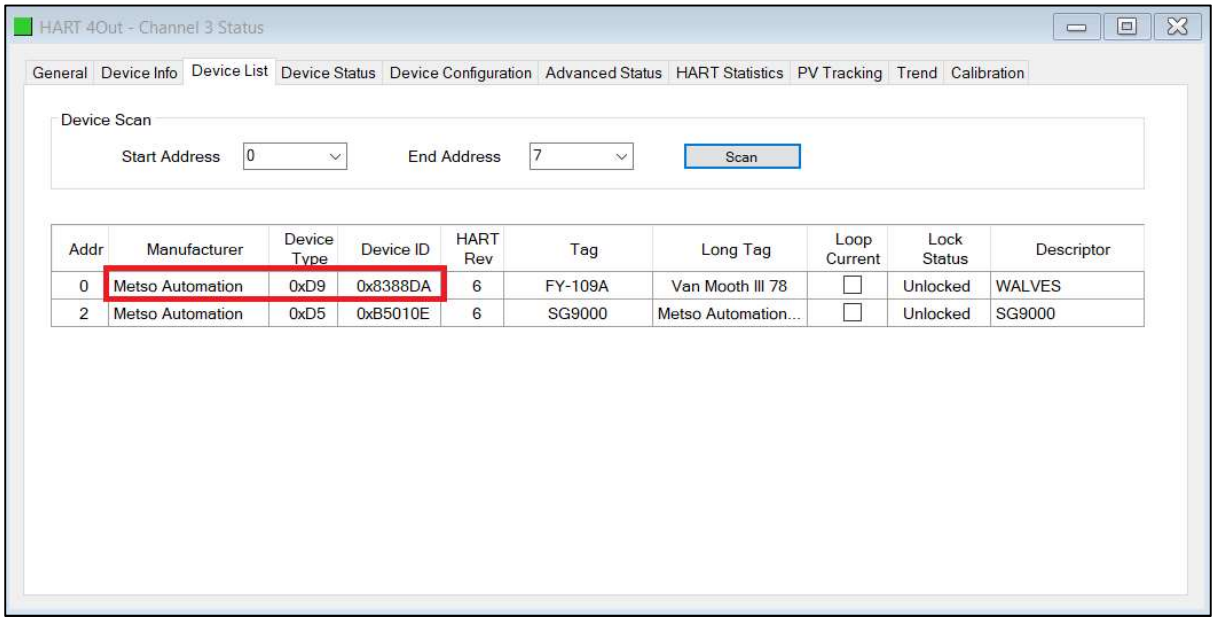

Figure 15 – Port Scan

Similar to the example above the user can extract the needed field device process variables from any device on the drop using the Relay Message. Below is an example of the HART command to be used for extracting the process variables.

HART Command	Request Data	Response Data		
3 – Read current and four dynamic variables	None	Byte 0-3	Current (mA)	Float
		Byte 4	PV units code	Byte
		Byte 5-8	Primary Variable	Float
		Byte 9	SV units code	Byte
		Byte 10-13	Second Variable	Float
		Byte 14	TV units code	Byte
		Byte 15-18	Third Variable	Float
		Byte 19	FV units code	Byte
		Byte 20-23	Fourth Variable	Float

Table 4 – Process Variable HART command and response

4. CONSIDERATIONS

4.1. MULTIDROP WITH OUTPUT DEVICES

When using output devices in a multidrop network it is advised to set the output current to max (20mA) in the output image of the field device. This will allow the user to add the maximum number of field devices possible to each drop.

4.2. MAX FIELD DEVICES PER PORT

The number of allowable field devices will depend on the individual power consumption of each device.