Time Sync

Series B

Datasheet

A-TSM/B

Document No. D107-010
09/2026
Revision 1.6

CONTENTS

1. Preface 2
   1.1. About this document 2
   1.2. Features 2
   1.3. Architecture 3
2. Module Layout 5
3. Ethernet/IP Network 7
4. GPS 7
5. GPS Antenna 8
6. 1588 PTP / NTP 8
7. Legacy Device Time Synchronization 9
8. Electrical Specifications 9
9. Certifications 10
10. Dimensions 11

aparian

1. PREFACE

1.1. ABOUT THIS DOCUMENT

This document contains the technical data for the Time Sync module. The Time Sync module provides high accuracy time synchronization across traditional Ethernet networks using 1588 Precision Time Protocol (PTP) as well as Network Time Protocol (NTP). The Time Sync module also provides GPS position and velocity data using the on-board GPS receiver. The Time Sync module is a stand-alone device allowing it to operate across various platforms.

1.2. FEATURES

The Time Sync module provides a cost-effective solution for high accuracy time synchronization for a range of applications. The Time Sync module also provides the user with position and velocity information using GPS.

Mode	Description
Time	The module is configured to only use the GPS constellation for best time accuracy.
Position	The module is configured to use GPS, SBAS and GLONASS satellite constellations to provide the most accurate positioning information.
Custom	This mode allows the user to select the constellations that are needed for the required application.

Table 1.1. – Modes of Operation

The Time Sync module is configured using the Aparian Slate application. This program can be downloaded from www.aparian.com free of charge. Slate offers various configuration methods, including a controller tag browser.

Hereafter the Time Sync module will be referred to as the **module**.

The module is a stand-alone device allowing it to operate across various platforms. The module can also seamlessly connect and integrate with Rockwell Automation's Allen Bradley equipment. The module can operate in both a Logix "owned" and standalone mode. In stand-alone mode the module can be configured and connected to an Ethernet network to accurately synchronize devices using 1588 PTP and NTP. With a Logix connection the input and output assemblies will provide timing, positioning, and diagnostic information which will be available in the Logix controller environment in addition to the PTP and NTP services.

The module uses an on-board GPS receiver to provide accurate time and position information. Because the module is stand-alone and connects to various devices over an Ethernet network the module can be placed as close as possible to the antenna position removing the need for costly low-loss coaxial cables that was traditionally needed to connect the GPS antenna to the module.

The on-board GPS receiver also provides velocity and odometer reading allowing the user to implement the module in various vehicle and tracking applications. The GPS accuracy information provided allows the user/controller to make calculated decision when looking at the position, velocity, or odometer information.

A built-in webserver provides detailed diagnostics of system configuration and operation, including the display of GPS time, position, and velocity without the need for any additional software.

1.3. ARCHITECTURE

The figure below provides an example of the typical network setup.

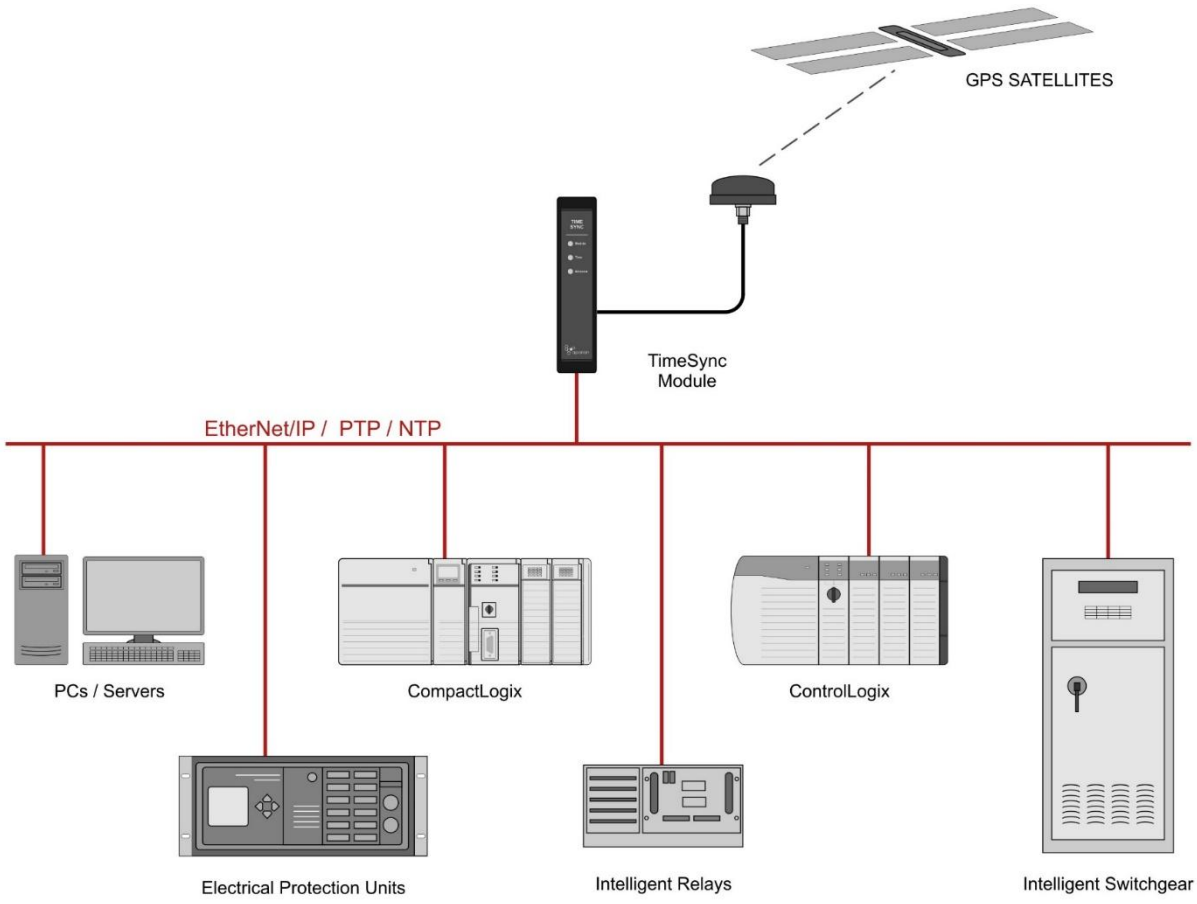

Figure 1.1. Example of a typical network setup for a timing application

The module can synchronize various devices across various platforms over traditional Ethernet using 1588 PTP and NTP.

With position, velocity, and odometer information various tracking and positioning applications can be implemented.

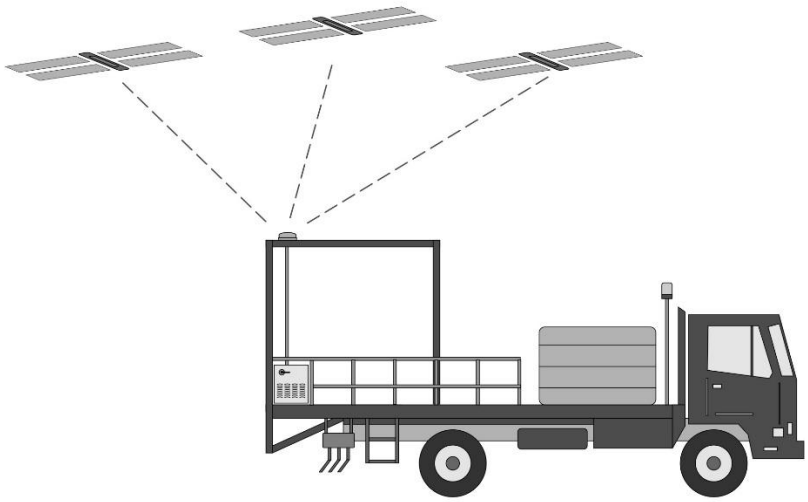

Figure 1.2. Example of a typical position and velocity application

Using the accuracy information provided calculated decisions can be made for various positioning applications including collision warning and avoidance systems.

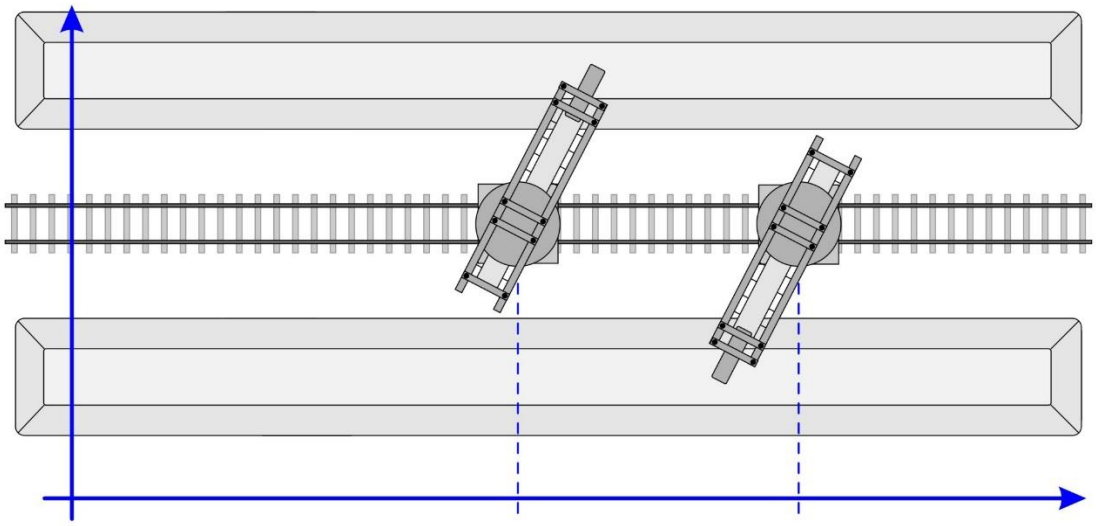

Figure 1.3. Example of a typical positioning application

2. MODULE LAYOUT

The module has three ports at the bottom of the enclosure as shown in the figure below. The ports are used for Ethernet, GPS antenna and power. The power port uses a 3- way connector which is used for the DC power supply and the earth connection.

The GPS antenna connector provides connection to the provided GPS antenna.

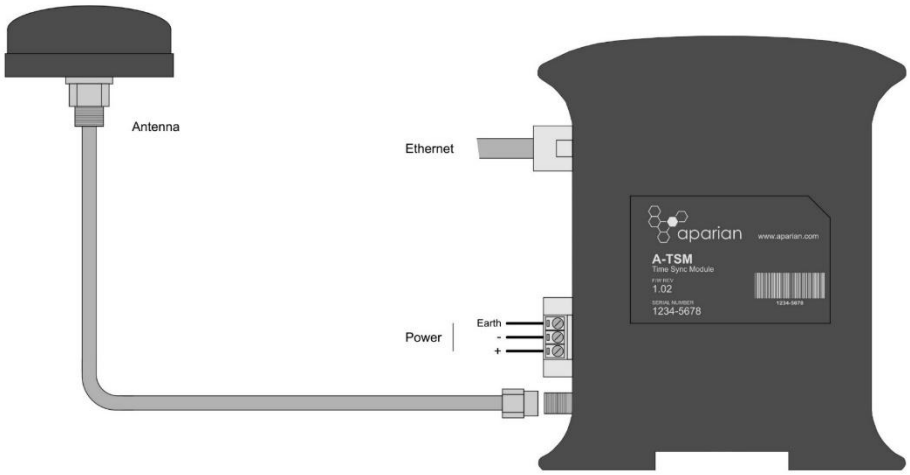

Figure 2.1. Time Sync module side view



Figure 2.2. Time Sync module bottom view

The module provides three diagnostic LEDs as shown in the front view figure below. These LEDs are used to provide information regarding the module system operation, the Ethernet interface, and the GPS receiver pulse-per-second (PPS).

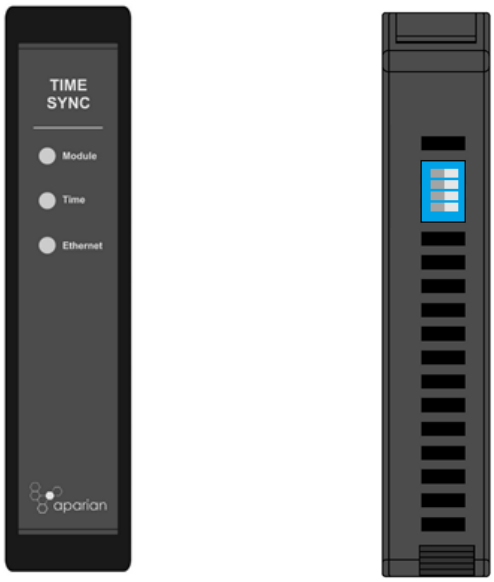

Figure 2.3. Time Sync front and top view

3. ETHERNET/IP NETWORK

Specification	Rating
Connector	RJ45
Conductors	CAT5 STP/UTP
ARP connections	Max 100
TCP connections	Max 20
CIP connections	Max 10
Communication rate	10/100Mbps
Duplex mode	Full / Half
Auto-MDIX support	Yes

Table 3.1. Ethernet specification

4. GPS

Specification	Rating
Antenna Port	SMA-Female
Supported Constellations	GPS / QZSS, GLONASS, SBAS, BeiDou
Velocity accuracy	0.05 m/s
Heading accuracy	0.3 degrees
Horizontal position accuracy	2.5m (Autonomous) 2.0m (SBAS)
Accuracy of time pulse signal	60ns
Altitude limit	50,000m
Velocity limit	500 m/s
Odometer support	Yes
Relative Position support	Yes
Isolated	Yes (Series B only)

Table 4.1. - GPS specification

5. GPS ANTENNA

Specification	Rating
Antenna Connector	SMA-Male
Cable Length	3m
Cable Type	RG174
Antenna Type	Active
Active Gain	27dB (typical)
Noise figure	1.5 (maximum)
Voltage	2.7 – 5.5 VDC
Temperature	-35°C to +85 °C
Enclosure description	Rugged low profile, UV resistant.

Table 5.1. - GPS Antenna specification

6. 1588 PTP / NTP

Specification	Rating
NTP support (PC time synchronization)	Yes
NTP Time Source supported	Yes
NTP Client Count Max	90
1588 PTP Grandmaster support	Yes
1588 PTP Management Support	Yes
1588 PTP End-to-End (E2E) Delay Mechanism Support	Yes
1588 PTP Peer-to-Peer (P2P) Delay Mechanism Support	Yes
1588 PTP / NTP GPS clock source support	Yes
1588 PTP Holdover reporting support	Yes
1588 PTP Network Transport	IPv4 UDP IEEE802.3
1588 PTP Client Count Max	100

Table 6.1. – 1588 PTP / NTP specification

7. LEGACY DEVICE TIME SYNCHRONIZATION

Specification	Rating
Allen-Bradley PLC5 time synchronization	Yes
Allen-Bradley SLC time synchronization	Yes
Modbus Device register updating	Yes
Legacy Device Auto Time Zone support	Yes

Table 7.1. Legacy Device time synchronization specification

8. ELECTRICAL SPECIFICATIONS

Specification	Rating
Power requirements	Input: 10 – 32V DC, (80mA @ 24VDC)
Power consumption	1.9 W
Connector	3-way terminal
Conductors	24 – 18 AWG
Enclosure rating	IP20, NEMA/UL Open Type
Temperature	-20 – 70 °C
Earth connection	Yes, terminal based
Emissions	IEC61000-6-4
ESD Immunity	EN 61000-4-2
Radiated RF Immunity	IEC 61000-4-3
EFT/B Immunity	EFT: IEC 61000-4-4
Surge Immunity	Surge: IEC 61000-4-5
Conducted RF Immunity	IEC 61000-4-6

Table 8.1. Electrical specification

9. CERTIFICATIONS

Certification	Mark
CE Mark	CE
ODVA Conformance	EtherNet/IP™ * F/W 1.008
RoHS2 Compliant	RoHS2
KCC	R-R-Apn-TSMB
RCM	

UL Mark
File: E494895
	c UL us LISTED
	CLASS 1, DIV 2, GROUPS A, B, C, D
	
	Note: The TSM/B UL Hazardous Certification extends to include the antenna and antenna cable, provided that:
	• The antenna must be of type:
	  ○ BULLET III (Trimble) , or
	  ○ ANT-GPSPUKS (RF Solutions)
	• The antenna cable may not exceed 300 ft in total, and must be of type:
	  ○ LMR240-FR, or
	  ○ LMR400-FR, or
	  ○ LMR600-FR.

ATEX	Ex II 3 G Ex nA IIC T5 X Gc -20°C ≤ Ta ≤ 70 °C

UKCA	UK CA

Table 9.1. Certifications

10. DIMENSIONS

Below are the enclosure dimensions as well as the required DIN rail dimensions.

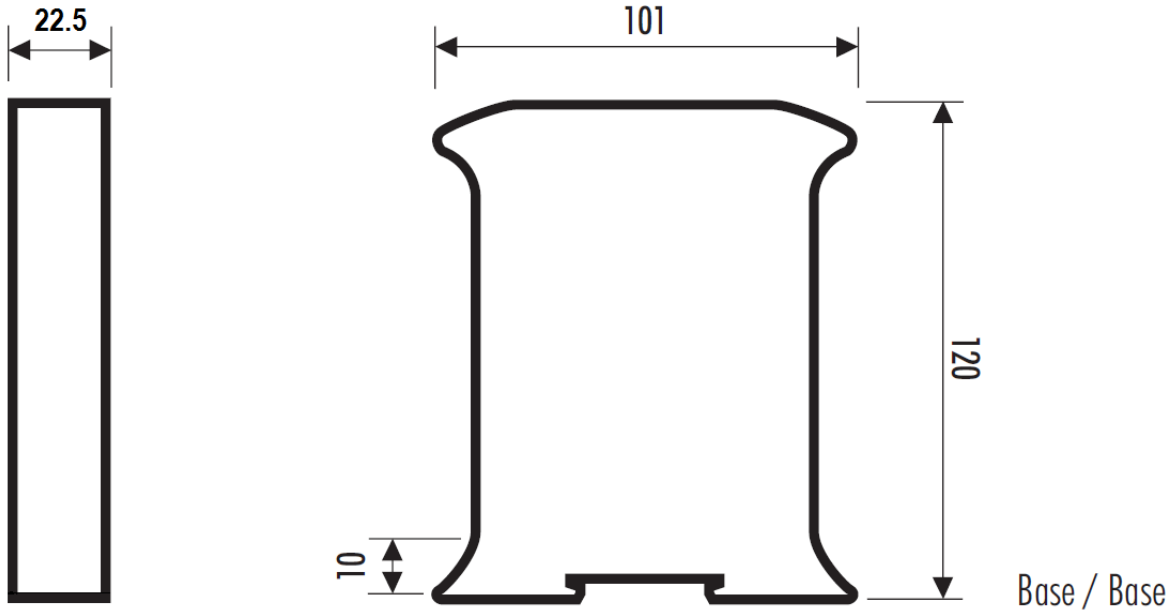

Figure 10.1. Time Sync module enclosure dimensions

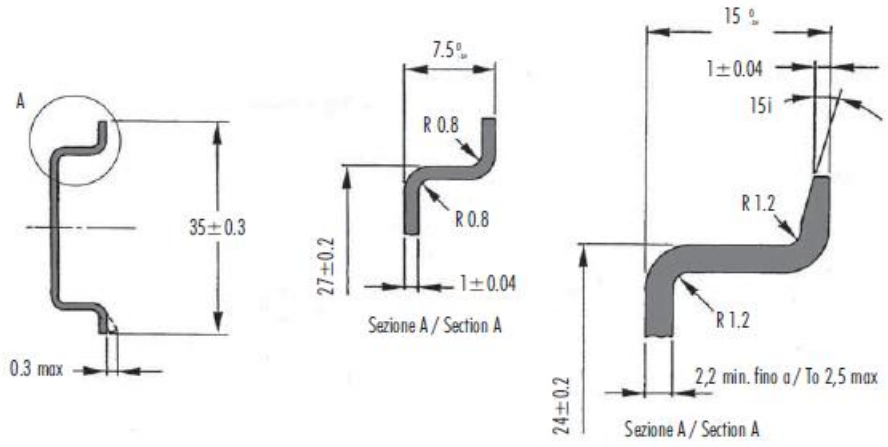

Figure 10.2. Required DIN dimensions