aparian

Modbus Router

Intelligent Modbus to EtherNet/IP Router

Route Modbus to Logix

Modbus-TCP

Modbus-RTU

RS232 & RS485 Versions

Built-In Packet Analyser

Direct-to-Tag™ Technology

DIN Rail Mount

Easy to configure

The Modbus Router provides intelligent data routing between EtherNet/IP and Modbus (serial Modbus-RTU or Ethernet Modbus-TCP). RS232 and RS485 versions are available. Simple configuration with the option of 3 user modes, enables the user to integrate Modbus devices to any Rockwell Logix platform (e.g. ControlLogix or CompactLogix). The Modbus Router is able to transfer data to a maximum of three Logix controllers. *Direct-to-Tag™* technology enables the module to exchange data directly with Logix Tags.



The three operating modes include:

1. Reactive mode: The Router will convert Modbus messages to Logix controller tag reads or tag writes (Modbus Slave).

2. Scheduled mode: The Modbus Router transfers data between a Modbus device and a number of Logix tags, using a preconfigured scheduled (Modbus Master). No Logix or remote device configuration is required.

3. Unscheduled mode: The Modbus Router provides a pass through function for Logix message instructions (Modbus Master).

Modbus Router

A-MBR
A-MBR-485

Network Architecture: - Reactive Mode

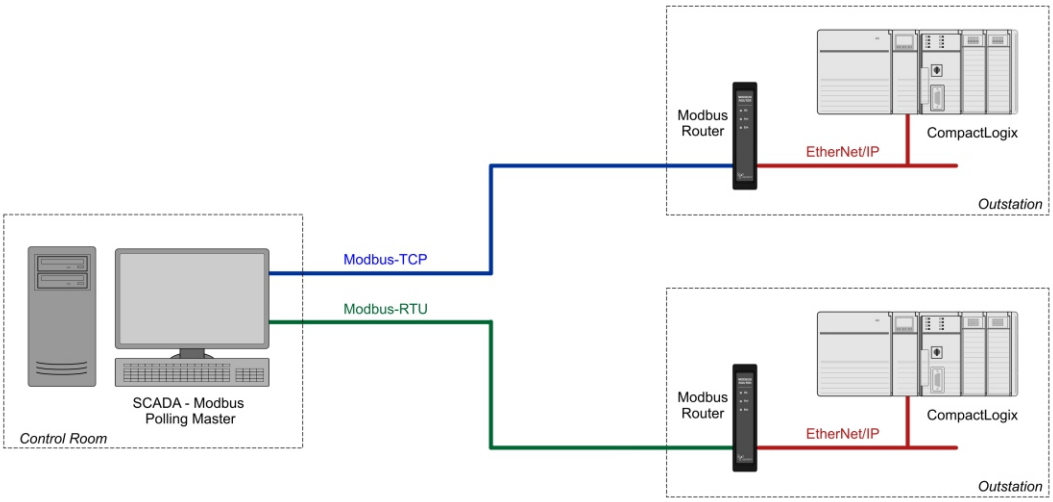

Network Architecture:- Scheduled Mode

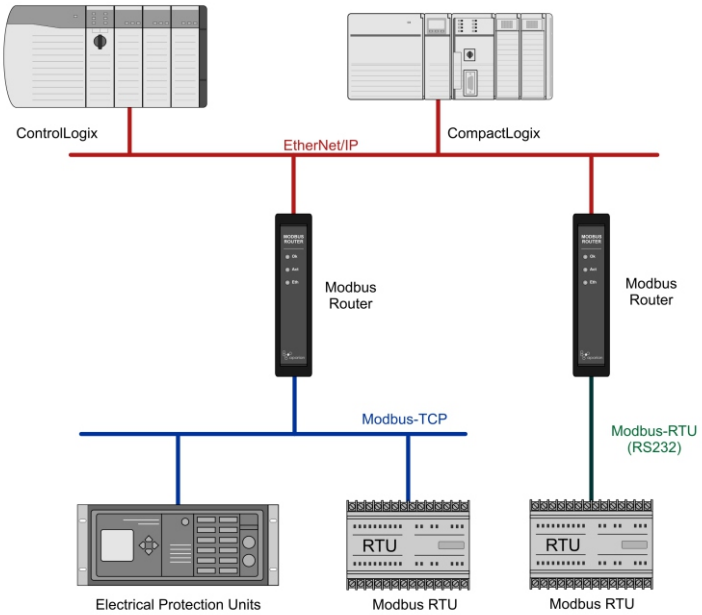

Specifications

EtherNet/IP

c UL us LISTED
CL 1 DIV 2 GRP A,B,C,D
E494895

Parameter	Rating
Power requirements	10 - 28 VDC (70mA @ 24VDC)
Operating temperature	-20 - 70 °C
RS232 Isolation	2500 V
BAUD Supported	1200, 2400, 4800, 9600, 19200, 38400, 57600, 115200
Modbus Protocol	TCP, RTU (RS232 or RS485)
Ethernet	10/100 Mbps, Full/Half Duplex, Auto-MIDX
Logix controller max	3
Mapping item max	40

Aparian Inc.
24 Twain Str
Irvine,
CA, 92617

Tel. (949) 445 4109
sales@aparian.com
www.aparian.com

aparian