Maximum Distance	3000 m
Transmit Power (at 1m of fiber)	OM1 - 62.5/125 µm -9 dBm (max.) -12 dBm (typ.) -17 dBm (min.) OM2 - 50/125 µm -12.8 dBm (max.) -15.8 dBm (typ.) -20 dBm (min.)
Optical Budget	13.0 dB (for OM1 - 62.5/125 µm) 9.0 dB (for OM2 - 50/125 µm)

ADDITIONAL INFORMATION

The following resources contain additional information that can assist the user with the module installation and operation.

Resource	Link
Slate Installation	http://www.aparian.com/software/slate
ControlNet Router User Manual ControlNet Router Datasheet Example Code & UDTs	http://www.aparian.com/products/controlnetrouter
ControlNet	http://www.odva.org
ControlNet Cabling	ControlNet Coax Media Planning and Installation Guide https://literature.rockwellautomation.com/idc/groups/literature/documents/in/cnet-in002_-en-p.pdf

SUPPORT

Technical support will be provided via the Web (in the form of user manuals, FAQ, datasheets etc.) to assist with installation, operation, and diagnostics.

For additional support the user can use either of the following:

Contact Us web link	https://aparian.com/controlnet-fiber-repeater
Support email	support@aparian.com

aparian

ControlNet Fiber Repeater

Quick Start Guide

A-CFR

NOTE: Before installing, configuring, operating, or maintaining Aparian products, please review this information and the information located on www.aparian.com for the latest software, documentation, and installation files specific to your Aparian product.

INTRODUCTION

This quick start guide provides a basic overview of the installation, operation, and diagnostics of the Aparian ControlNet Fiber Repeater module (A-CFR).

A pair of A-CFR modules can be used to physically extend a ControlNet network by up to 3km using standard industrial multi-mode fiber.

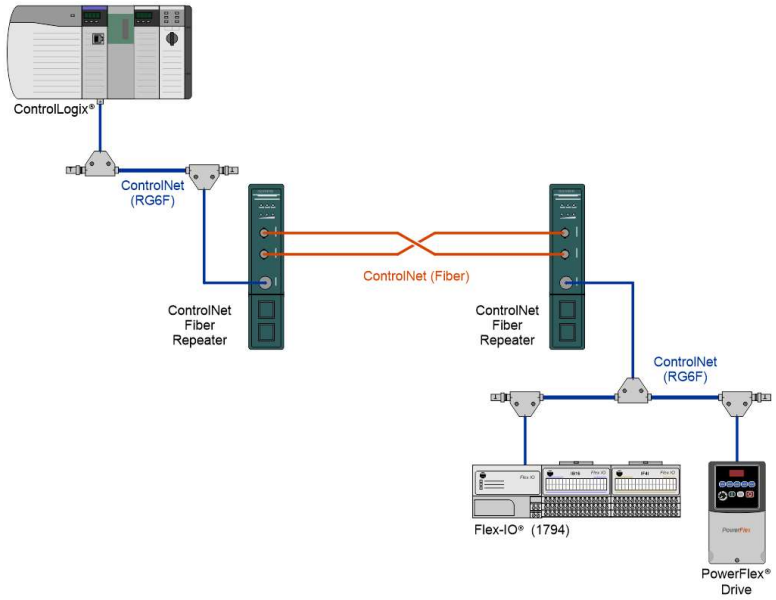

MODULE INSTALLATION

The module has one 3-way power connector at the bottom of the enclosure as shown in the figure below. There is one ControlNet BNC connector in the front of the module for the ControlNet (coaxial) copper connection. There are two ControlNet fiber ports (ST) on the front of the module, for fiber Transmit (Tx) and Receive (Rx) respectively.

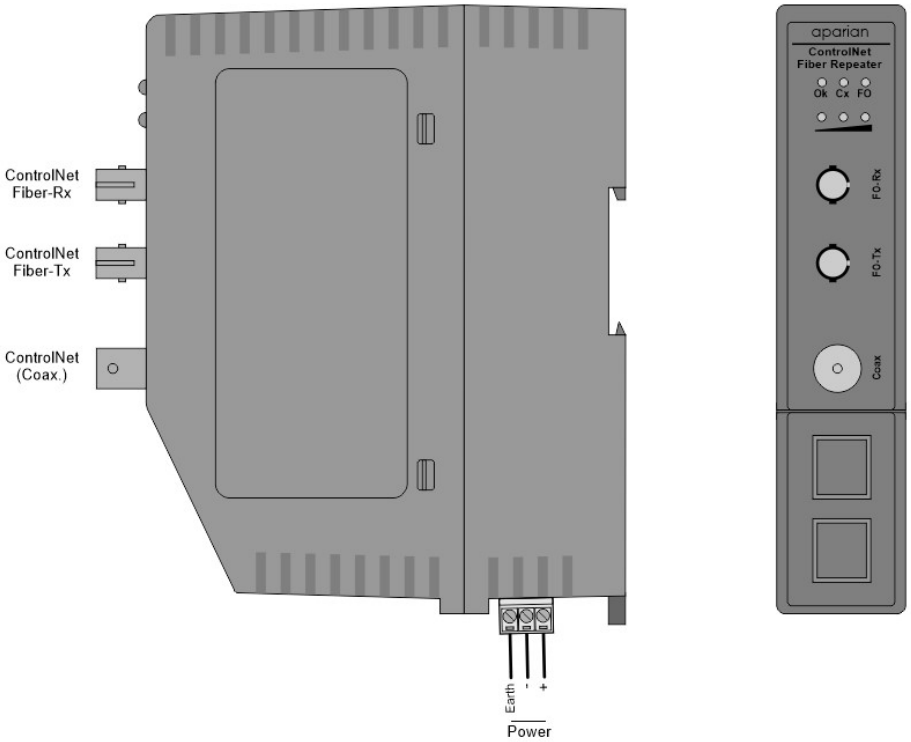

LED	Description
Ok	Power Indication Solid Green - The module is powered up correctly.
Cx	The status of the ControlNet copper (Coax.) link. Note: When the Cx and FO LEDs are flashing together, then use the ControlNet Combined Channel LED State table below. **Flashing Red-Green:** Bad network configuration **Flashing Red-Off:** Cable fault or lonely. **Flashing Green-Off:** Temporary network errors. **Solid Green:** Channel Ok
FO	The status of the ControlNet Fiber link. Note: When the Cx and FO LEDs are flashing together, then use the ControlNet Combined Channel LED State table below. **Flashing Red-Green:** Bad network configuration **Flashing Red-Off:** Cable fault or lonely. **Flashing Green-Off:** Temporary network errors. **Solid Green:** Channel Ok
	The lower 3 LEDs provide an indication of the activity and received optical signal strength. These LEDs may flash when the ControlNet equipment is powering up, but once the link is established at least 2 of the 3 LEDs should be solid green.

ELECTRICAL AND ENVIRONMENTAL

Specification	Rating
Power requirements	Input: 10 – 32V DC, (70 mA @ 24 VDC)
Power consumption	1.7 W (max)
Connector	3-way terminal
Conductors	24 – 18 AWG
Enclosure rating	IP20, NEMA/UL Open Type
Temperature	0 – 70 °C

CONTROLNET FIBER

Specification	Rating
Connectors	2 x ST-Type connectors (FO-Tx and FO-Rx).
Wavelength	820 nm
Transmission Mode	Multi-mode
Supported Fiber Cables	OM1 - 62.5/125 µm OM2 - 50/125 µm