DHCP Manager

Datasheet

A-DHCP

Document No. D111-010
10/2017
Revision 1.3

CONTENTS

1. Preface 2
   1.1. About this document 2
   1.2. Features 2
      DHCP 2
      Location Co-ordinated IP Address Assignment 2
   1.3. Architecture 5
      Normal Mode 5
      ETAP-Child Mode 6
2. Ethernet/IP Network 8
3. DHCP 8
4. Electrical Specifications 8
5. Certifications 9
6. Dimensions 10

aparian

1. PREFACE

1.1. ABOUT THIS DOCUMENT

This document contains the technical data for the DHCP Manager.

1.2. FEATURES

The DHCP Manager provides location co-ordinated IP Address assignment to **DLR capable (embedded switch) devices** connected in a linear topology. In applications where different sub-systems can be connected in any order, the module ensures that their IP addresses are assigned in the order in which they are located. Examples of this application can be found in the packaging industry.

DHCP

The Dynamic Host Configuration Protocol (DHCP) is a standard network protocol that is capable of dynamically assigning IP addresses and other network parameters to any device on the network that requests it. This significantly reduces the effort required by network administrators. An IP address pool is provisioned to the DHCP server, and it will assign these IP addresses incrementally typically using a first-come-first-served methodology. Additional network parameters including subnet masks, default gateways etc. can also be assigned by the DHCP server.

LOCATION CO-ORDINATED IP ADDRESS ASSIGNMENT

In traditional DHCP assignment, the IP Address assignment for devices typically follows the order in which they are connected or powered up.

With the Aparian DHCP Manager, the IP Addresses are assigned to match the physical location or position on the linear network.

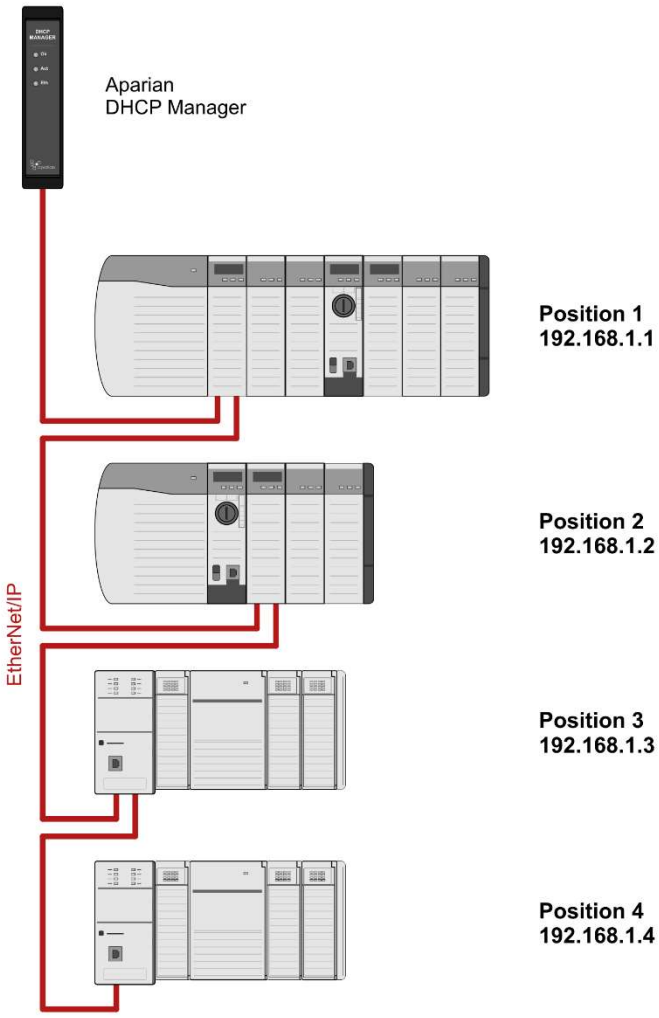

Figure 1.1. – Typical Setup

The DHCP Manager is able to serve IP addresses to devices that are not directly part of the embedded switch linear topology. Such devices could either be connected at the end of the network, or be connected using 3 port devices such as ETAP modules.
There are two strategies or modes that control the assignment of these devices:

- Normal mode
- ETAP-Child mode.

Depending on the mode, different classes of devices are assigned IP addresses from one of the three different IP ranges configured in the module.
The different classes of modules are defined as follows:

Device Class	Description
Ordered	Devices that are embedded switch, Device-Level-Ring capable, devices connected in the linear network. IP addresses are assigned from the Ordered IP range.

Child	Devices that are connected to the third port of a three-port device (e.g. ETAP) located on the linear network. This class of device is only valid in the ETAP-Child mode. Only one child can exist for each three-port device. Any additional devices found connected to that port will be defined as visitors and not children. IP addresses are assigned from the Child IP range.
Visitor	All other devices that are connected to the network will be visitors. These included multiple modules connected off a three-port device, or non-DLR devices connected to the end of the linear network. IP addresses are assigned from the Visitor IP range.

Table 1.1 - Device Classes

Mode	Description
Normal	All devices in the linear topology (including three port devices) are assigned location co-ordinated IP addresses from the Ordered IP range. All other devices are assigned IP addresses from the Visitor IP range.
ETAP-Child	All devices in the linear topology (including three port devices) are assigned location co-ordinated IP addresses from the Ordered IP range. Each child (device connected to the third port of a three-port device) will be assigned an IP address from the Child IP range. **The offset within the Child IP range will be equal to that of the offset of the parent three-port device in the ordered range.** For example, if an ETAP is the 5th device in the linear network, it will be assigned the 5th IP address in the Ordered IP range. Its child will be assigned the 5th IP address in the Child IP range, irrespective of how many preceding children there are. All other devices are assigned IP addresses from the Visitor IP range.

Table 1.2. – Modes of Operation

The DHCP Manager module is configured using the Aparian Slate application. This program can be downloaded from www.aparian.com free of charge.

Hereafter the DHCP Manager will be referred to as the **module**.

The module can operate in both a Logix “owned” and standalone mode. With a Logix connection the input and output assemblies will provide direct control and additional diagnostics information which will be available in the Logix controller environment.

A built-in webserver provides detailed diagnostics of system configuration and operation, without the need for any additional software.

1.3. ARCHITECTURE

NORMAL MODE

The figure below provides an example of the typical network setup in Normal mode with the following IP ranges configured:

Ordered: **192.168.1.1 – 192.168.1.99**
Visitor: **192.168.1.201 – 192.168.1.230**

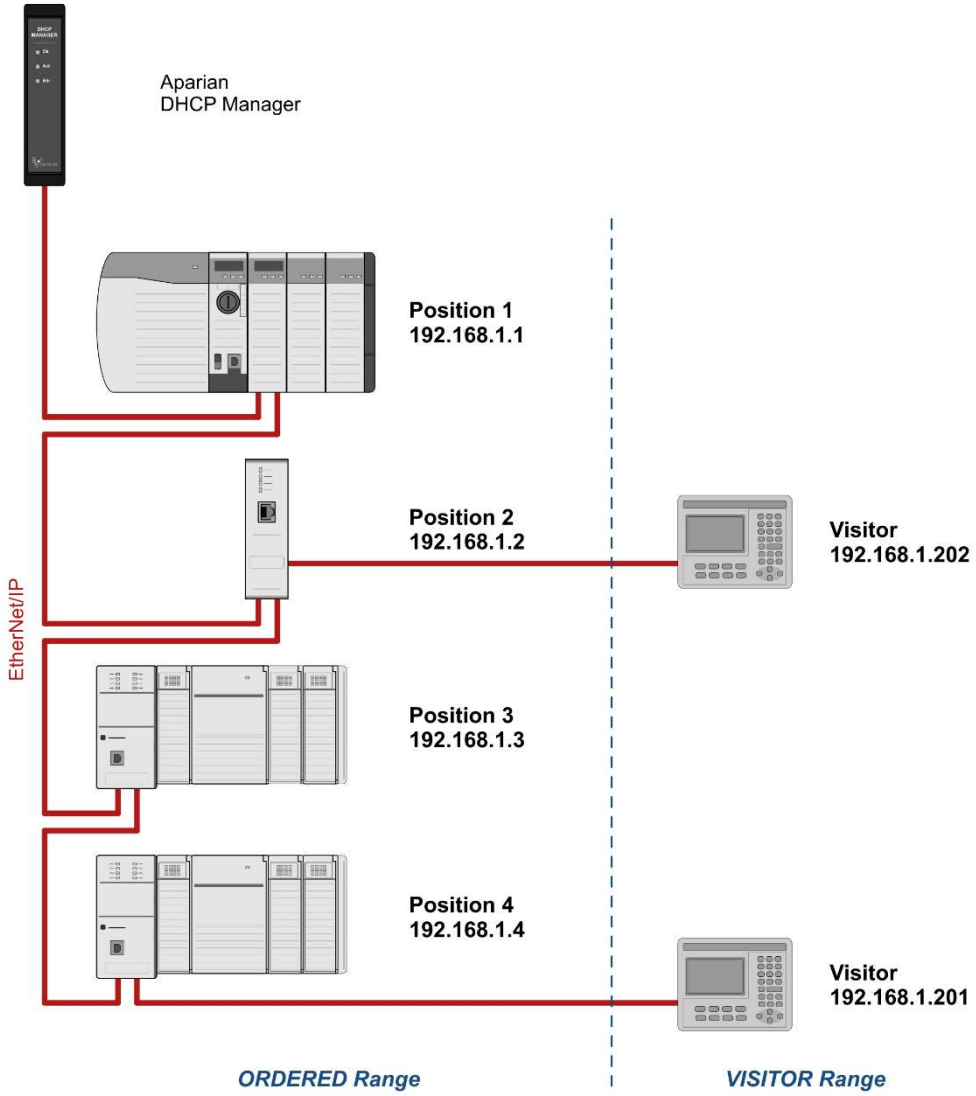

Figure 1.2. - Example of a network setup in Normal mode

In this mode all the devices in the linear topology are assigned location co-ordinated IP addresses from the Ordered IP range, this includes the ETAP located at position 2. The first device in the linear network receives the first IP address in the Ordered IP range and so on.

Both operator panels are not directly part of the linear network and are assigned addresses IP addresses from the Visitor IP range.

NOTE: The visitor addresses are assigned in the chronological order in which their DHCP requests are received. Therefor any correlation between their IP address and their physical location would be coincidental. Even though the device at IP address 192.168.1.201 is connected at the end of the linear network, it is classed as a visitor because it is not a DLR capable device.

ETAP-CHILD MODE

The ETAP-Child mode is illustrated in the figure below, with the following IP ranges configured

Ordered: **192.168.1.1 – 192.168.1.99**
Child: **192.168.1.101 – 192.168.1.199**
Visitor: **192.168.1.201 – 192.168.1.230**

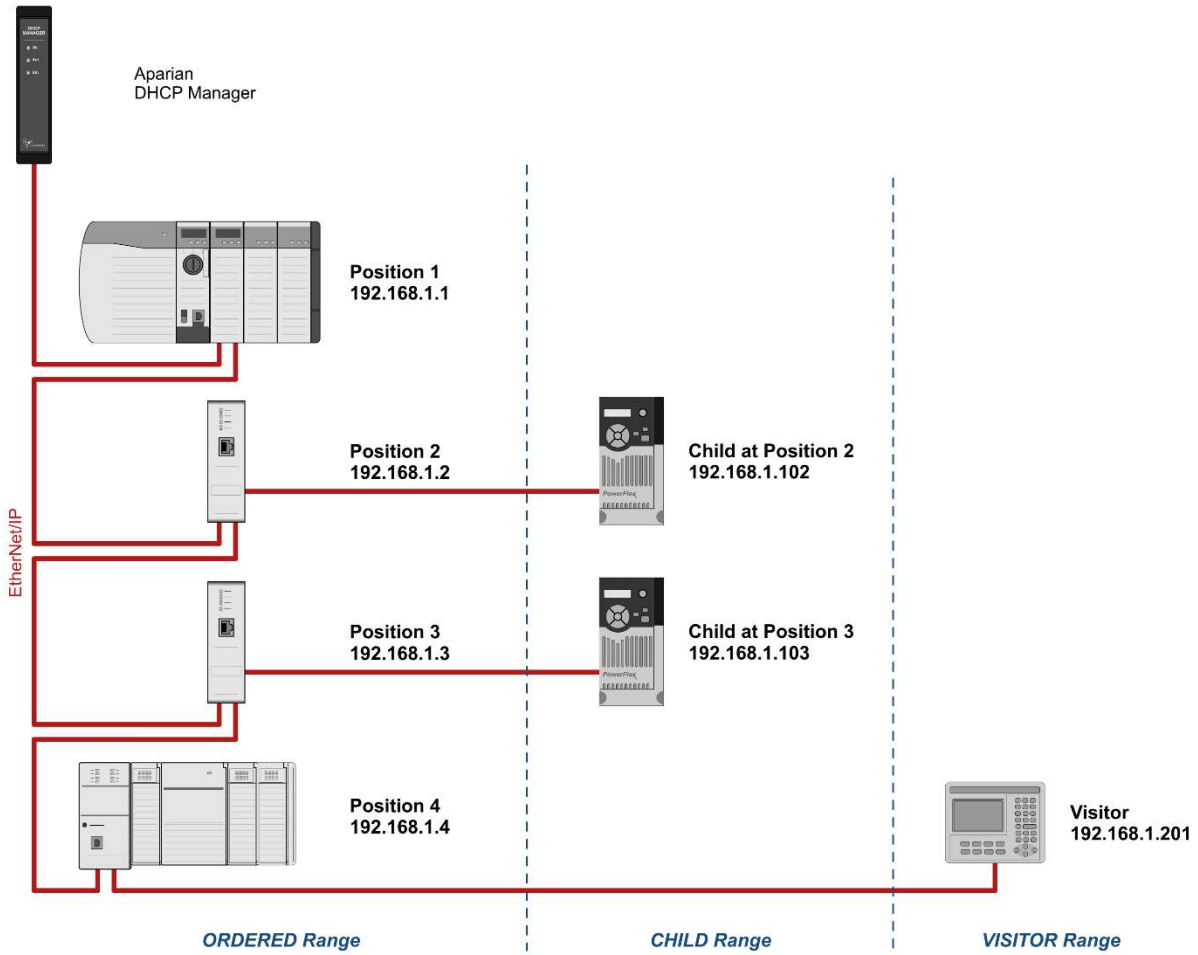

Figure 1.3 – Example setup of network in ETAP-Child Mode

In this mode, similar to that of the normal mode, all the devices in the linear topology are assigned location co-ordinated IP addresses from the Ordered IP range, this includes the two

ETAPs located at positions 2 and 3. The first device in the linear network receives the first IP address in the Ordered IP range and so on.

The drive connected to the ETAP at position 2, meets the criteria of a child and is assigned an IP address from the Child IP range. Because its parent is located at position 2, it will receive the 2nd IP address in the Child range, viz. 192.168.1.102.

Similarly, the drive located at position 3 is assigned the 3rd IP address from the Child IP range.

The operator panel is classed as a visitor and is assigned an addresses from the Visitor IP range. The visitor addresses are assigned in the chronological order in which their DHCP requests are received.

NOTE: When using the DHCP Manager in ETAP-Child mode it is important to connect the three-port devices (e.g. ETAP modules) so that Port 1 is connected on the side of the DHCP Manager. Failure to do so will result in assignment failure and may require device ports to be manually re-enabled.

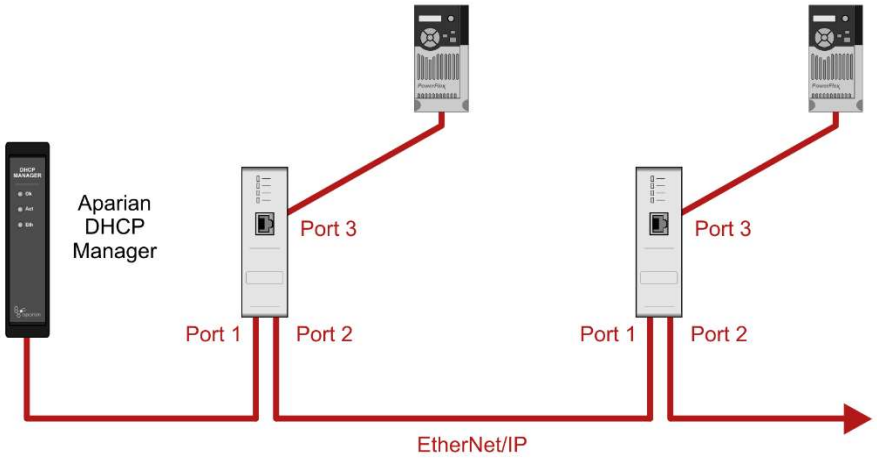

Figure 1.4 - Three-port device connection – Must enter on Port 1

The following figure shows another example of the DHCP Manager configured in ETAP-Child mode. For the sake of illustration, the following points are made:

- The positons number from the first DLR capable device nearest to the DHCP Manager module.
- ETAPs are connected so as to have Port 1 connected to the DHCP Manager side.
- The Child positions follow after their parents (ETAPS) that is why the second drive, is Child position 4, and not 3.

2. ETHERNET/IP NETWORK

Specification	Rating
Connector	RJ45
Conductors	CAT5 STP/UTP
ARP connections	Max 20
TCP connections	Max 20
CIP connections	Max 10
Communication rate	10/100Mbps
Duplex mode	Full / Half
Auto-MDIX support	Yes

Table 2.1 - Ethernet specification

3. DHCP

Specification	Rating
Maximum Ordered Devices	100
Maximum Visitor Devices	255
Maximum Child Devices	100

Table 3.1 - DHCP specification

4. ELECTRICAL SPECIFICATIONS

Specification	Rating
Power requirements	Input: 10 – 28V DC, (70mA @ 24VDC)
Power consumption	1.7 W
Connector	3-way terminal
Conductors	24 – 18 AWG

Enclosure rating	IP20, NEMA/UL Open Type
Temperature	0 – 60 °C
Earth connection	Yes, terminal based
Emissions	IEC61000-6-4
ESD Immunity	EN 61000-4-2
Radiated RF Immunity	IEC 61000-4-3
EFT/B Immunity	EFT: IEC 61000-4-4
Surge Immunity	Surge: IEC 61000-4-5
Conducted RF Immunity	IEC 61000-4-6

Table 4.1 - Electrical specification

5. CERTIFICATIONS

Certification	**Mark**
CE Mark	
UL Mark File: E494895	 CLASS 1, DIV 2, GROUPS A, B, C, D
RCM	

Table 5.1 – Certifications

6. DIMENSIONS

Below are the enclosure dimensions as well as the required DIN rail dimensions.

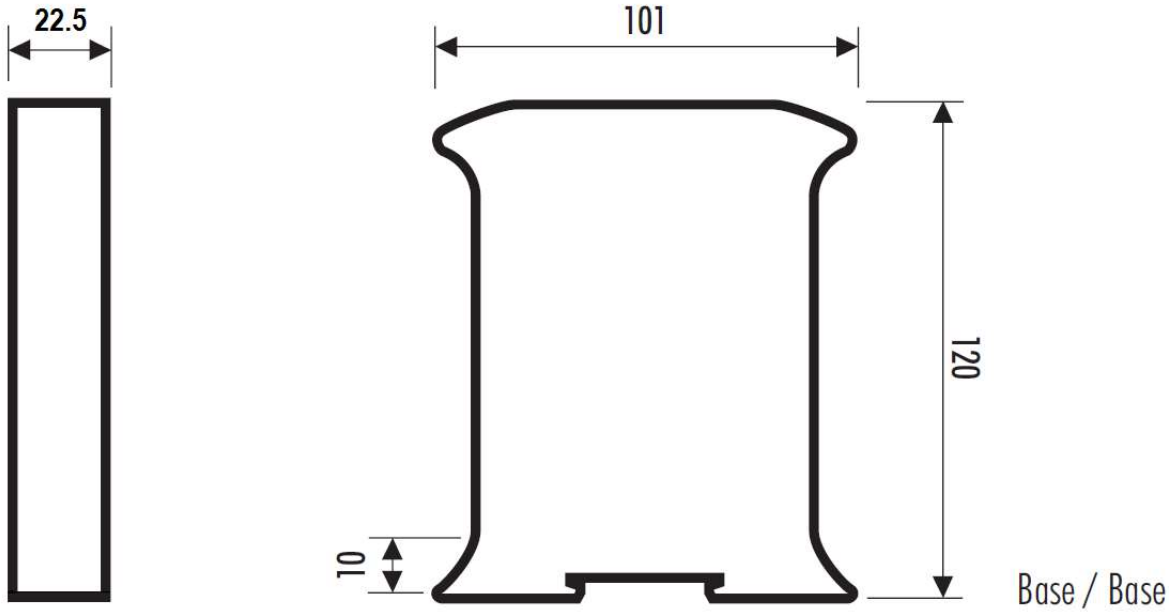

Figure 6.1 – DHCP Manager enclosure dimensions

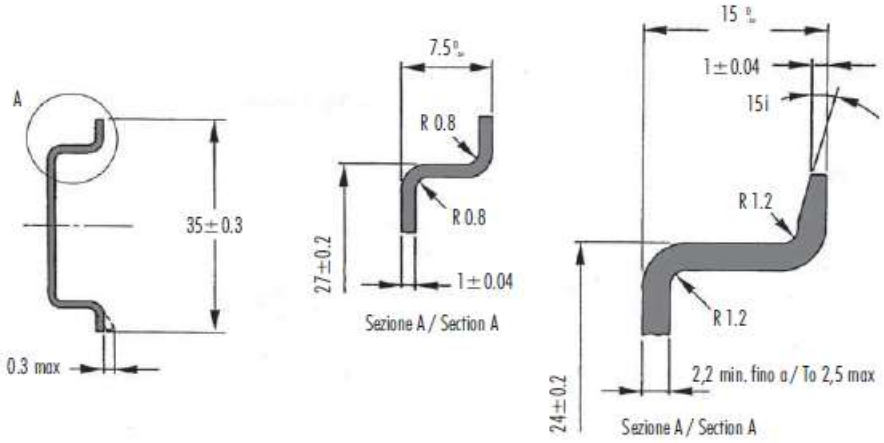

Figure 5.2 - Required DIN dimensions