DV Scanner

Datasheet

A-DVS

Document No. D153-014
11/2023
Revision 1.1

CONTENTS

1. Preface 2
   1.1. About this document 2
   1.2. Introduction to the DV Scanner 2
   1.3. Features 3
   1.4. Architecture 4
      Standalone Mode, Linear Ethernet, Single Logix Controller 4
      Standalone Mode, Ring Ethernet, Single Logix Controller 4
      Redundant Mode, Linear Ethernet, Single Logix Controller 5
      Redundant Mode, Ring Ethernet, Redundant Logix Controller 6
2. Technical Specifications 8
   2.1. Dimensions 8
   2.2. Electrical 9
   2.3. Environmental 9
   2.4. Ethernet 10
   2.5. IO Bus (LocalBus) 10
   2.6. Certifications 11

aparian

1. PREFACE

1.1. ABOUT THIS DOCUMENT

This document contains the technical data for the DV Scanner.

1.2. INTRODUCTION TO THE DV SCANNER

The DV Scanner allows interfacing between a Rockwell Automation Logix system and the DeltaV™ M-series IO. (DeltaV™ is a mark of one of the Emerson Process Management family of companies.)

The DV Scanner connects to a Rockwell Automation Logix Controller (e.g. ControlLogix or CompactLogix) via EtherNet/IP and connects to the DeltaV™ M-series LocalBus via a Right Carrier Extender (KJ4001X1-NA1) using a standard D-shell cable (KJ4002X1-BF2).

This allows the DV Scanner to connect to, and control, the IO in an M-series system

A typical DV Scanner (as a Standalone Master) connecting to the DeltaV™ M-series IO is shown below.

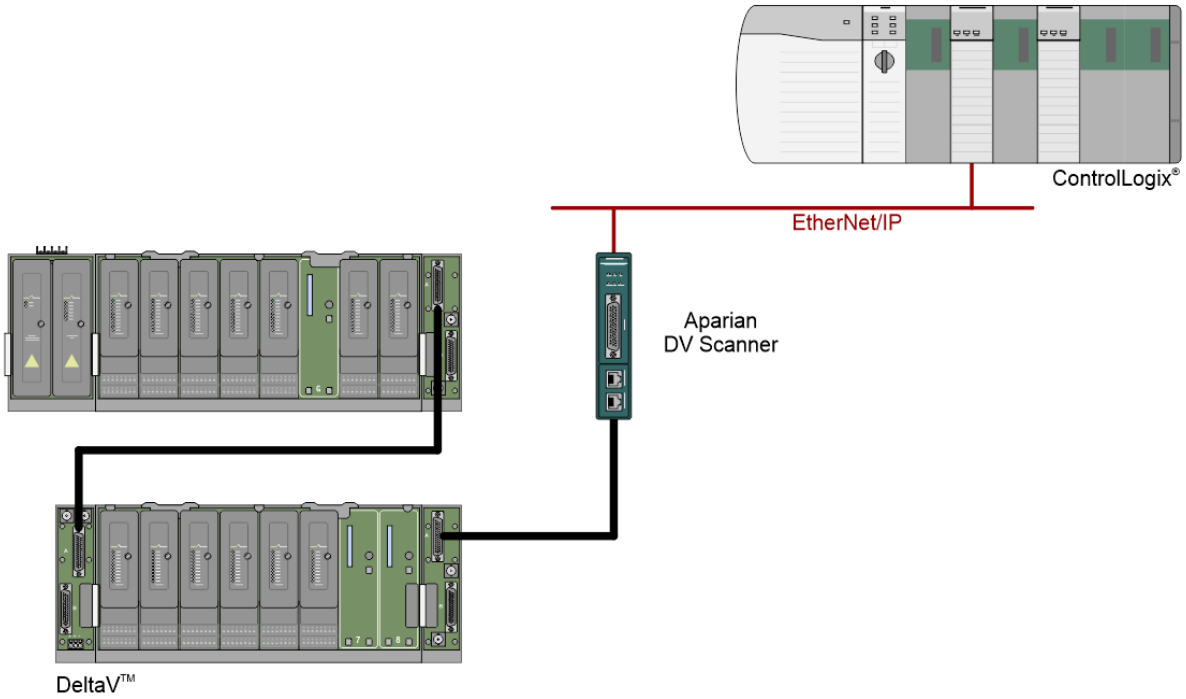

Figure 1.1 – Typical Standalone Setup

1.3. FEATURES

The DV Scanner provides an interface between DeltaV™ M-series IO and a Logix system using multiple EtherNet/IP class 1 connections. The DV Scanner supports up to 32 DeltaV™ M-series IO cards and consumes 8 Logix IO (Class 1) connections.

The DV Scanner is configured using the Aparian Slate application which can be downloaded from www.aparian.com free of charge.

Within the Slate environment each DV IO card can be configured to match the application. The following IO cards are supported:

- **KJ3001X1-CA1** – 32 Channel, 24Vdc Dry Contact, Digital Input (DI)
- **KJ3204X1-BA1** – 32 Channel, 24Vdc High-Side, Series 2 Digital Output (DO)
- **KJ3222X1-BA1** – 8 Channel, 4-20mA HART, Series 2 Analog Input (AI)
- **KJ3221X1-BA1** – 8 Channel, 4-20mA HART, Series 2 Analog Output (AO)
- **KJ3001X1-BA1** – 8 Channel, 24Vdc Isolated, Digital Input (DI)
- **KJ3001X1-BG1** – 8 Channel, 24Vdc Isolated, Digital Output (DO)
- **KJ3002X1-BC1**– 8 Channel, 4-20mA, Analog Input (AI)
- **KJ3002X1-BB1**– 8 Channel, 4-20mA, Analog Output (AO)

Using the EDS AOP (Add-On-Profile) in Studio 5000, the DV Scanner can be added directly into the Logix IO tree. AOIs (Add-On-Instructions) are provided for both Standalone and Redundant architectures and facilitate the mapping of IO and diagnostic information to meaningful (UDT) structures.

In the case of a redundant system, the AOI also automatically switches between the Active and Standby DV Scanner.

To aid in migration, the DV Scanner provides a Shadow mode where the DV Scanner can run in parallel with the existing DeltaV™ M-series controller. In this mode the existing CPU is controlling the IO cards and the DV Scanner is listening-in and providing the input and output readback data to the Logix.

The DV Scanner hosts two Ethernet ports which can either be used as an unmanaged switch or in a Device-Level-Ring (DLR) topology providing Ethernet redundancy.

The DV Scanner has a range of diagnostics, statistics, and tools to support the user during the migration process. This will speed up fault finding and reduce down-time.

1.4. ARCHITECTURE

The DV Scanner can be employed in a number of architectures based on the following options:

- Logix System – Standalone or Redundant
- Ethernet – Linear or Device Level Rung (DLR)
- DV Scanner – Standalone or Redundant

Examples of some of these combinations are described below.

STANDALONE MODE, LINEAR ETHERNET, SINGLE LOGIX CONTROLLER

In this architecture, a single DV Scanner is connected to the DeltaV™ M- series system, with a linear Ethernet network connecting to a single Logix Controller.

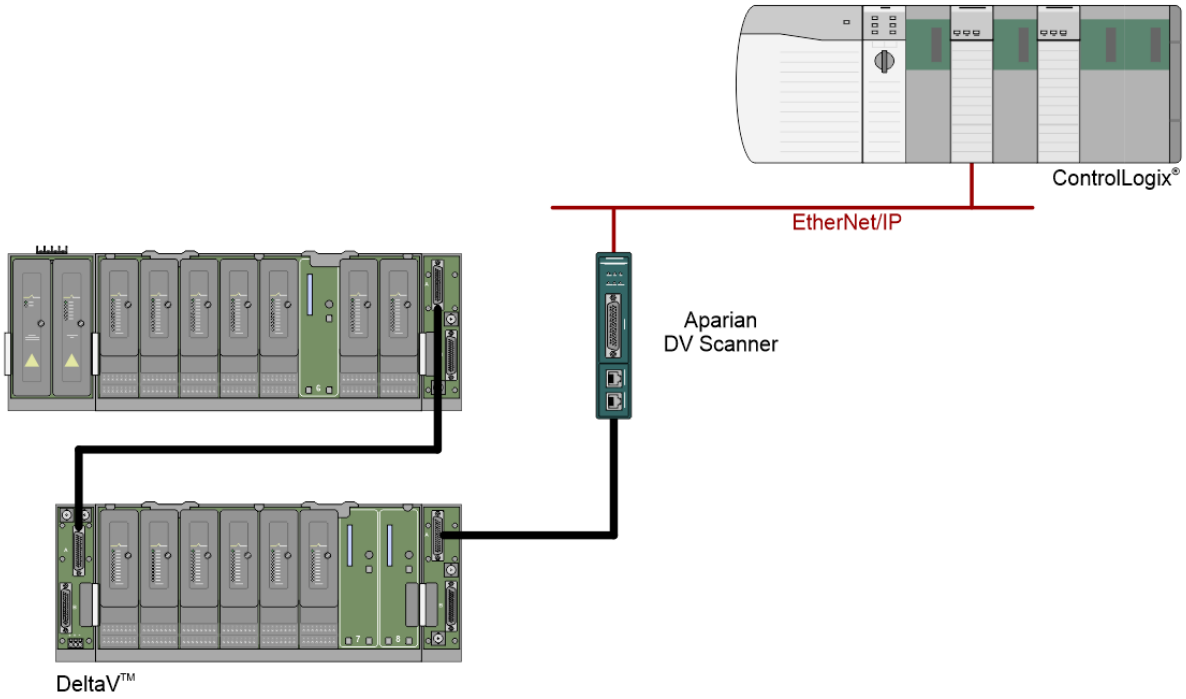

Figure 1.2 – Standalone mode, linear Ethernet, single Logix Controller

STANDALONE MODE, RING ETHERNET, SINGLE LOGIX CONTROLLER

In this architecture, a single DV Scanner is connected to the DeltaV™ M-series system with a ring DLR Ethernet network connecting to a single Logix Controller.

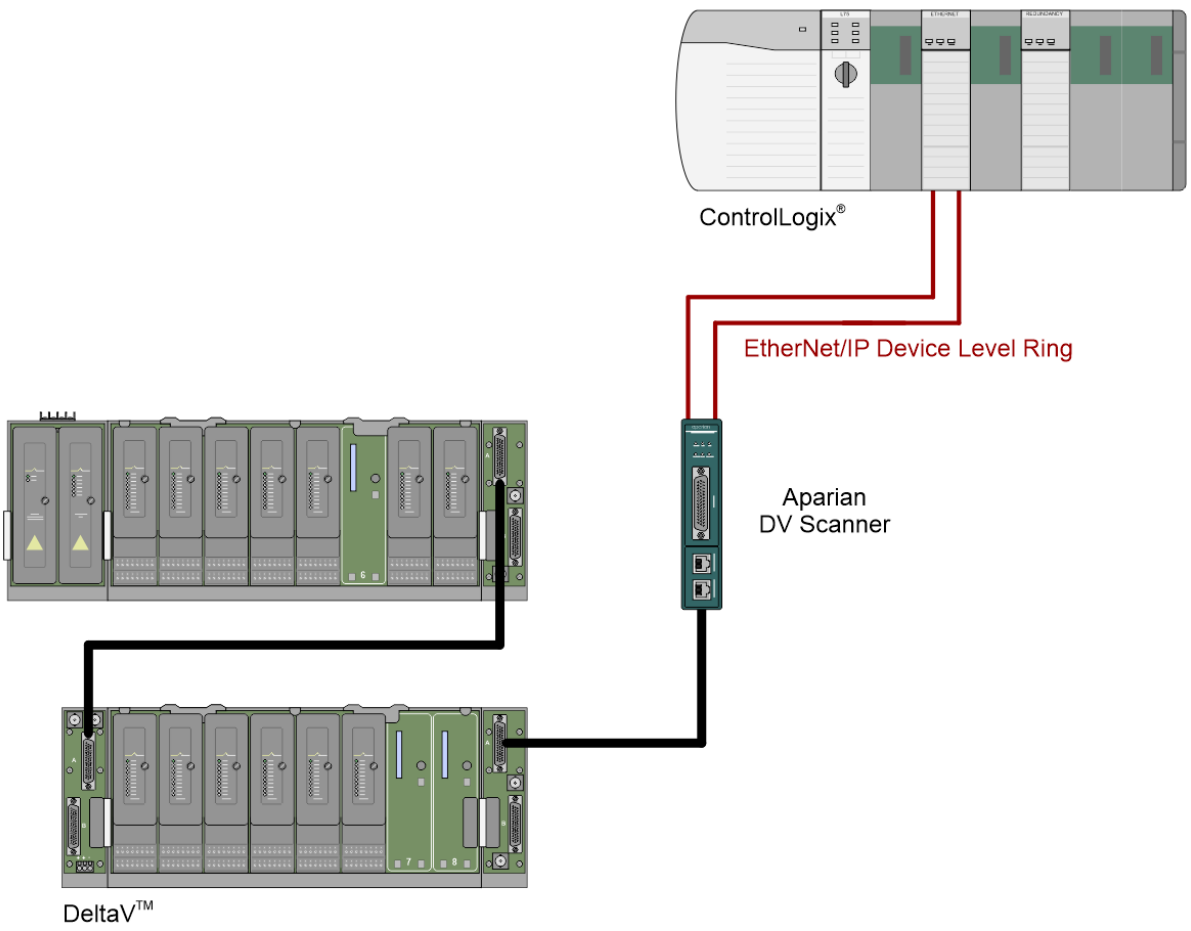

Figure 1.3 – Standalone mode, ring Ethernet, single Logix Controller

Redundant Mode, Linear Ethernet, Single Logix Controller

In this architecture, two DV Scanners are connected to the DeltaV™ M-series system, with a linear Ethernet network connecting them a single Logix Controller.

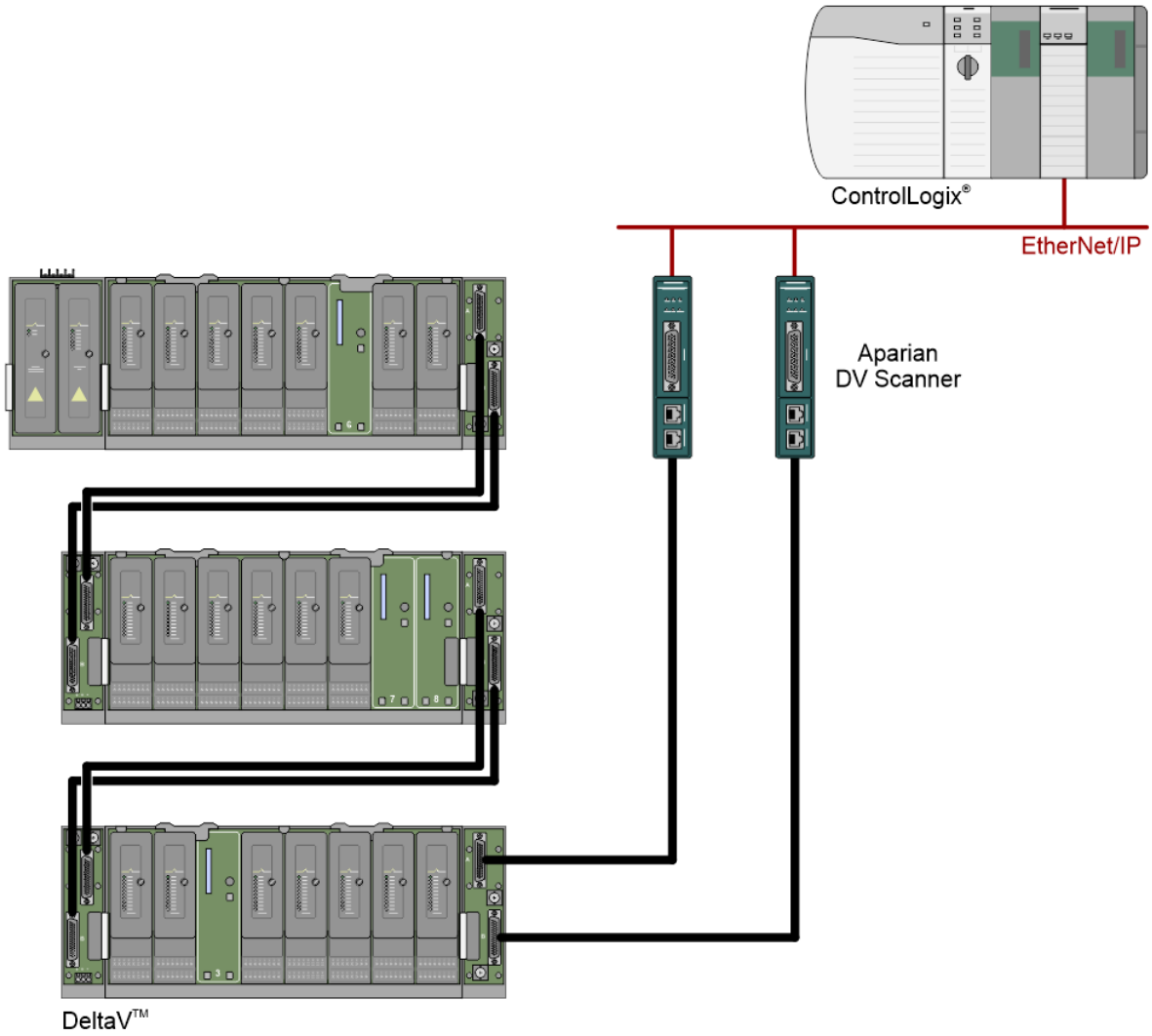

Figure 1.4 – Redundant mode, linear Ethernet, single Logix Controller

Redundant Mode, Ring Ethernet, Redundant Logix Controller

In this architecture, a redundant pair of DV Scanners are both connected to the DeltaV™ M-series system, with a DLR Ethernet network connecting to a redundant pair of Logix Controllers.

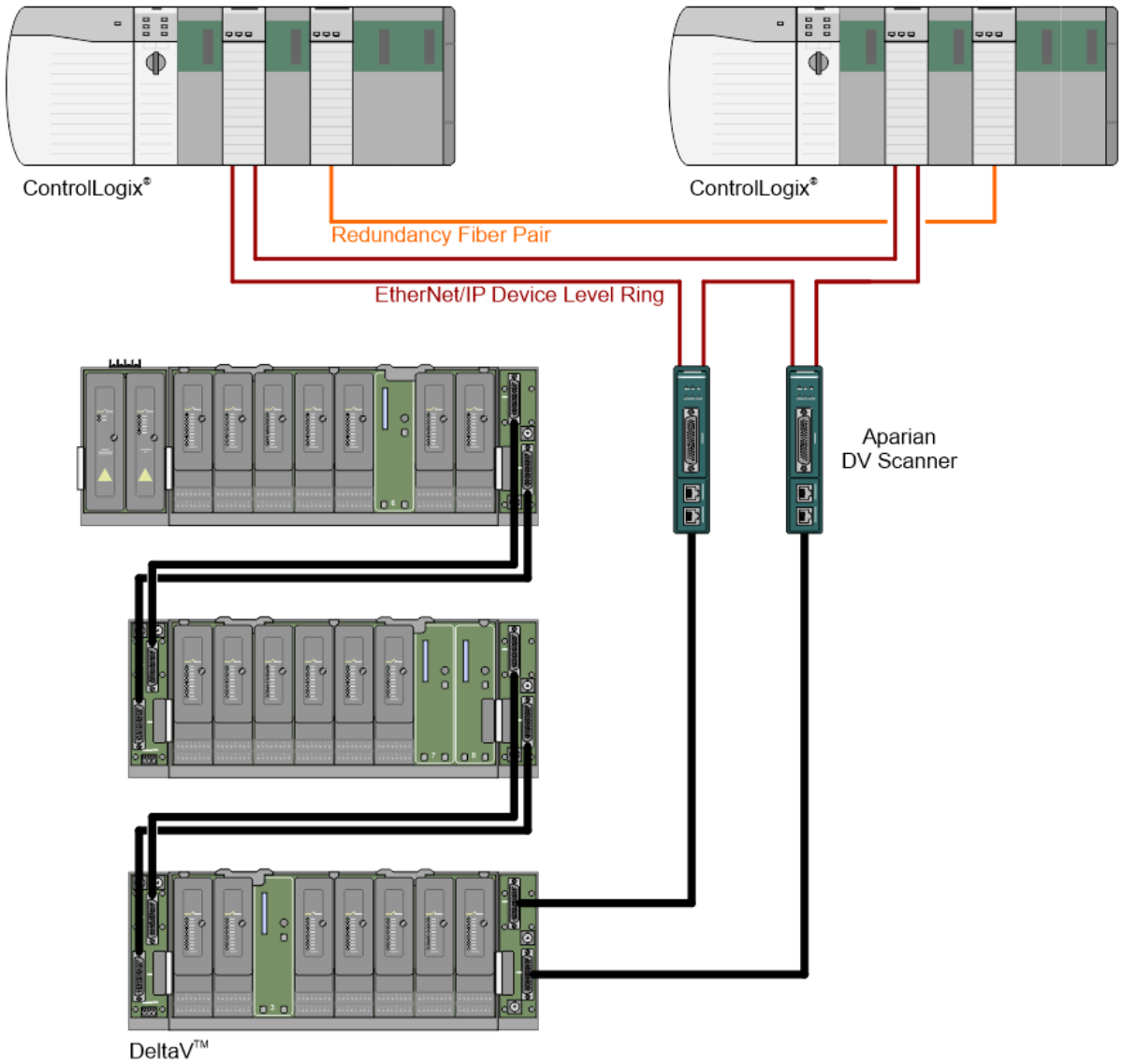

Figure 1.5 – Redundant mode, ring Ethernet, redundant Logix Controller

2. TECHNICAL SPECIFICATIONS

2.1. DIMENSIONS

Below are the DV Scanner enclosure dimensions and DIN rail dimensions. All dimensions are in millimeters.

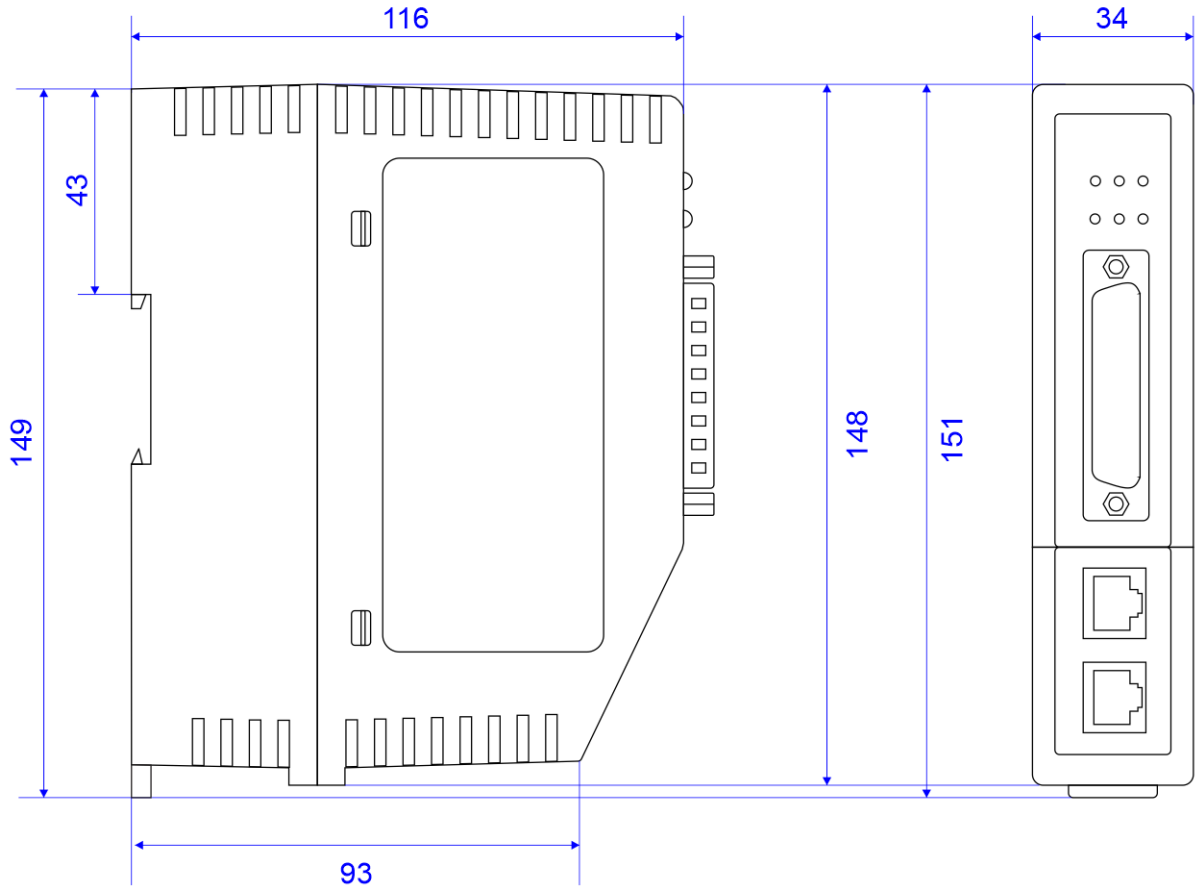

Figure 2.1 – DV Scanner Dimensions

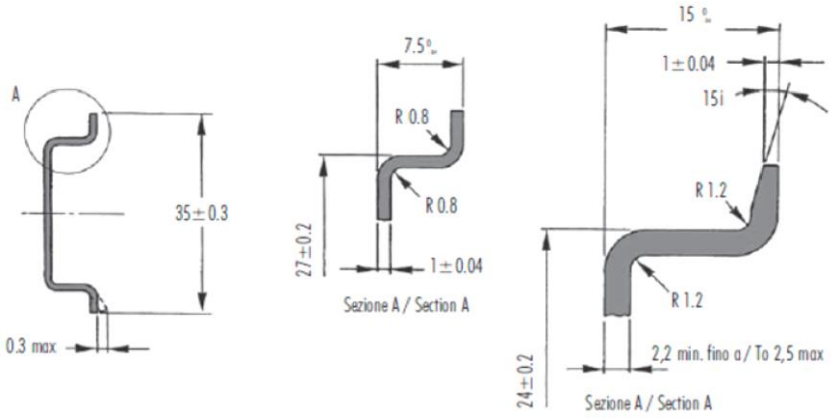

Figure 2.2 - Required DIN dimensions

2.2. ELECTRICAL

Specification	Rating
Power requirements	Input: 10 – 32V DC
Power consumption	1.5 W (Max.) Current: 140 mA @ 10 V Current: 60 mA @ 24 V
Connector	3-way terminal
Conductors	24 – 18 AWG
Enclosure rating	IP20, NEMA/UL Open Type
Temperature	-20 – 70 °C
Earth connection	Yes, terminal based
Emissions	IEC61000-6-4
ESD Immunity	EN 61000-4-2
Radiated RF Immunity	IEC 61000-4-3
EFT/B Immunity	EFT: IEC 61000-4-4
Surge Immunity	Surge: IEC 61000-4-5
Conducted RF Immunity	IEC 61000-4-6

Table 2.1 - Electrical specification

2.3. ENVIRONMENTAL

Specification	Rating
Mounting	External DIN Rail mounted.
Temperature	-20 – 70 °C
Air Quality	Non-corrosive

Table 2.2 - Environmental specification

2.4. ETHERNET

Specification	Rating
Connector	RJ45
Conductors	CAT5 STP/UTP
ARP connections	Max 40
TCP connections	Max 40
CIP connections	Max 10
Communication rate	10/100Mbps
Duplex mode	Full/Half
Auto-MDIX support	Yes
Embedded switch	2 x Ethernet ports Supports DLR (Device-Level-Ring) and Linear topology.

Table 2.3 - Ethernet specification

2.5. IO BUS (LOCALBUS)

Specification	Rating
IO Card Count	Max of 32
Cards Supported	**KJ3001X1-CA1** – 32 Channel, 24Vdc Dry Contact, Digital Input (DI) **KJ3204X1-BA1** – 32 Channel, 24Vdc High-Side, Series 2 Digital Output (DO) **KJ3222X1-BA1** – 8 Channel, 4-20mA HART, Series 2 Analog Input (AI) **KJ3221X1-BA1** – 8 Channel, 4-20mA HART, Series 2 Analog Output (AO) **KJ3001X1-BA1** – 8 Channel, 24Vdc Isolated, Digital Input (DI) **KJ3001X1-BG1** – 8 Channel, 24Vdc Isolated, Digital Output (DO) **KJ3002X1-BC1**– 8 Channel, 4-20mA, Analog Input (AI) **KJ3002X1-BB1**– 8 Channel, 4-20mA, Analog Output (AO)
Connection Port	DB44 D-Shell (male)
Connection Cable	Requires D-shell extender cable, either: **KJ4002X1-BF2** - Standard cable (1.2m, or **KJ4002X1-BF3** - Short cable (0.87m), or **KJ4002X1-BF4** - Extended cable (1.53m) ***Note***: Cables are **not** supplied with the DV Scanner.
IO Carrier Extender	Requires a Right Carrier Extender: **KJ4001X1-NA1** - Right Carrier Extender (or similar) ***Note***: Carrier Extenders are **not** supplied with the DV Scanner.

Table 2.4 – IO Bus specification

2.6. CERTIFICATIONS

Certification	Mark
CE Mark	CE
RoHS2 Compliant	RoHS2
UKCA	UK CA

Table 2.5 – Certifications