aparian

DV Scanner

DeltaV™ M-series I/O interface for Logix

Integrate DeltaV™ M-series I/O in Logix

Shadow-Mode

Phased Migration

Import FHX Configuraton

Device Level Ring

Scanner Redundancy

Easy to configure

The Aparian DV Scanner enables a Rockwell Automation Logix system to configure and control DeltaV™ M-series I/O cards. This provides a reduced-risk migration strategy for these legacy DeltaV™ systems. Instead of replacing all the I/O, a new ControlLogix system can be phased in, with little disruption to production.



The DV Scanner can operate in one of two modes:

Run mode - The M-series I/O is controlled by the Logix system after the DeltaV™ CPU has been removed.

Shadow mode - The DV Scanner runs in parallel with the existing DeltaV™ M-series controller which is controlling the I/O cards. The DV Scanner is listening-in and providing the input and output readback data to the Logix.

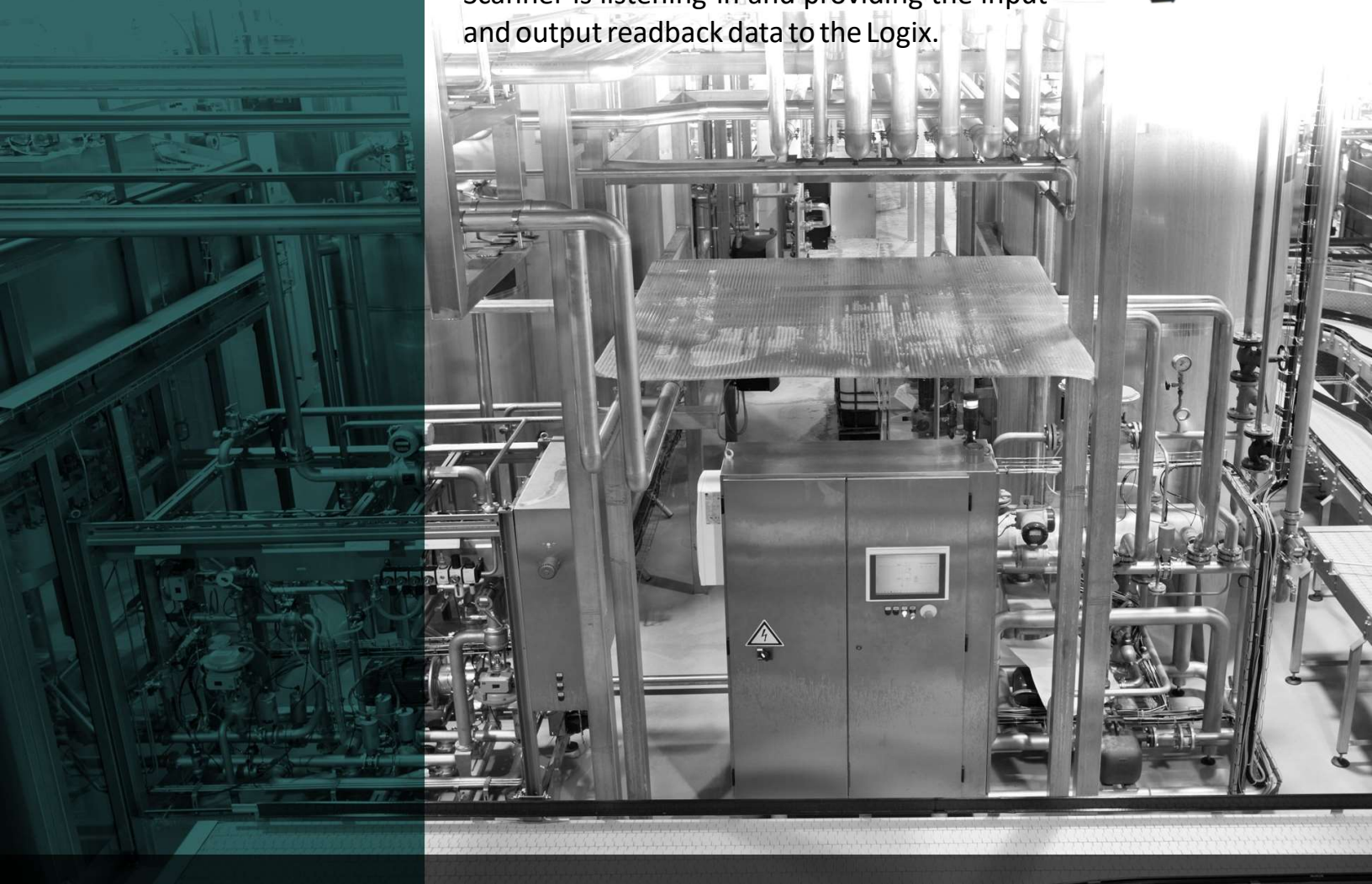

DV Scanner
A-DVS

The DV Scanner connects to the DeltaV™ M-series LocalBus via a Right Carrier Extender (KJ4001X1-NA1) using a standard D-shell cable (KJ4002X1-BF2).

Up to 32 M-series I/O cards can be configured per DV Scanner and multiple Scanners can be added to a Logix controller where required. I/O card configuration can be done manually or by importing an FHX file.

The DV Scanner provides dual Ethernet ports which are capable of participating in a Device Level Ring. A pair of DV Scanners can be configured in a redundant (Active / Standby) configuration for critical systems.

Integration into Logix makes use of an EDS Add-on-profile, which provides IO module data and diagnostics in an intuitive tag structure.

Configuration of the scanner and IO cards makes use of the Aparian Slate configuration software.

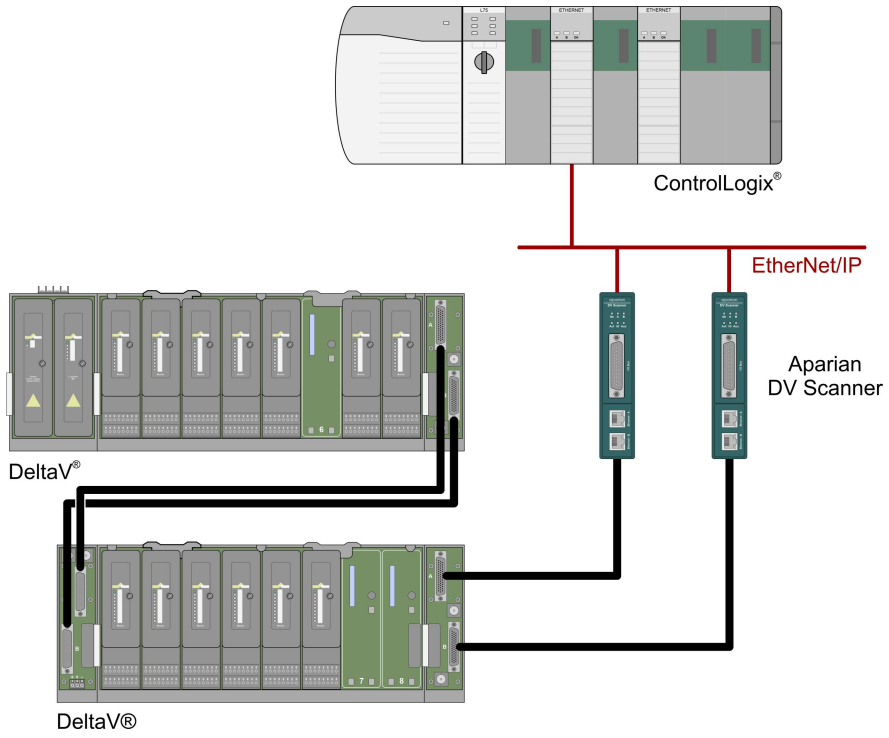

Note: ***DeltaV™*** *is a mark of one of the Emerson Process Management family of companies.*

Specifications

Parameter	Rating
Power requirements	10 - 32 VDC, (1.5W Max.)
Operating temperature	-20 to +70 °C
Ethernet	10/100 Mbps, Full/Half Duplex, Auto-MIDX, DLR
Maximum IO cards	32 per DV Scanner
Scanner Redundancy	Yes

Aparian, Inc.
24 Twain
Irvine, CA 92617
USA

Tel: +1 (949) 445 4109
sales@aparian.com
www.aparian.com

aparian