DeviceNet Router/B

Datasheet

A-DNTR/B

Document No. D154-008
12/2023
Revision 1.3

CONTENTS

1. Preface 2
   1.1. About this document 2
   1.2. Introduction to the DeviceNet Router/B 2
   1.3. Features 6
   1.4. Architecture 7
2. Technical Specifications 12
   2.1. Dimensions 12
   2.2. Electrical 13
   2.3. Ethernet 13
   2.4. Serial Port (RS232) 14
   2.5. Serial Port (RS485) 14
   2.6. DeviceNet 14
   2.7. DeviceNet Scanner 15
   2.8. DeviceNet Target 15
   2.9. PCCC 16
   2.10. EtherNet/IP Target 16
   2.11. EtherNet/IP Originator 16
   2.12. Modbus Client 16
   2.13. Modbus Server 17
   2.14. Certifications 17

aparian

1. PREFACE

1.1. ABOUT THIS DOCUMENT

This document contains the technical data for the DeviceNet Router/B.

1.2. INTRODUCTION TO THE DEVICENET ROUTER/B

The DeviceNet Router/B provides intelligent data routing between either EtherNet/IP or Modbus TCP/RTU and a DeviceNet network. This allows the user to integrate DeviceNet devices into a Rockwell Logix platform (e.g., ControlLogix or CompactLogix) or any Modbus Client or Server device with minimal effort.

The module can be configured to be either a DeviceNet Scanner or a DeviceNet Device allowing the user to not only integrate DeviceNet devices into a Logix or Modbus system, but to also allow the user to use EtherNet/IP or Modbus devices in an existing DeviceNet network (by using the DeviceNet Router/B in device mode).

DeviceNet Mode:

DeviceNet Scanner
When the module operates as a DeviceNet Scanner, it can connect to a maximum of 63 DeviceNet Devices. The input and output data from each DeviceNet Device can be mapped to any of the operating interfaces (EtherNet/IP Target, Modbus Server, Modbus Client, or EtherNet/IP Originator).

DeviceNet Device
When the module is configured to be a DeviceNet Device, it will allow the module to have input and output data sizes of up to 128 bytes.

Primary Interface:
The module can use one of five interface modes:

PCCC Client
The DeviceNet Router is able to asynchronously exchange data between a DeviceNet polling master (scanner) and an Ethernet PCCC device. The sizes of the DeviceNet's produced and consumed data are independently configurable from 0 to 128 bytes each.

The consumed (DeviceNet) data can then be mapped to a PLC5 type address file, e.g. N33, and then read by an Ethernet device e.g. a PanelView. Similarly, the produced

data (DeviceNet) can also be mapped to a PLC5 type address file, to which an Ethernet device could write.

EtherNet/IP Target

As a EtherNet/IP target, the module can use one of two methods to read and write data to and from the DeviceNet network:

- **EtherNet/IP Class 1 connection**

  Here a remote EtherNet/IP device (e.g. a Logix controller) establishes a number of Class 1 connections to the module. DeviceNet data can be mapped into two separate input and output class 1 cyclic connections to the Logix controller (allowing up to 1KB input and 1KB output to be exchanged at the requested packet interval – RPI).

EtherNet/IP Originator

As an EtherNet/IP originator, the module can use one of two methods to read and write data to and from the DeviceNet network:

- **EtherNet/IP Explicit Messaging**

  This allows the DeviceNet Scanner or Devices to exchange data with up to 10 EtherNet/IP devices. The module can use either Class 3 or Unconnected Messaging (UCMM) to Get and Set data in the remote EtherNet/IP devices.

- **Direct-To-Tag technology**

  This allows the DeviceNet Scanner or Devices to exchange data with a Logix controller without the need to write any application code (e.g. ladder) in Studio 5000. The DeviceNet data is directly read from, or written to, Logix tags.

- **EtherNet/IP Class 1 connection**

  DeviceNet data (from either DeviceNet Scanner or Devices) can be mapped to a maximum of 10 EtherNet/IP devices using input and output class 1 cyclic connections. This will allow the DeviceNet Router/B to “own” the EtherNet/IP target device and exchange DeviceNet data using the EtherNet/IP device’s input and output assemblies.

Modbus Server

The diagnostics and DeviceNet data (from either DeviceNet Scanner or Devices) will be written to, or read from, the module’s internal Modbus Registers (Holding or Input Registers). These registers can be accessed by a remote Modbus Client using either Modbus TCP, Modbus RTU232, or Modbus RTU485.

Modbus Client

The diagnostics and DeviceNet data (from either DeviceNet Scanner or Devices) will be written to, or read from, the module’s internal Modbus Registers (Holding or Input Registers). The Modbus Auxiliary Map can then be used to configure the Modbus data exchange between multiple remote Modbus Server devices and the module’s internal Modbus registers. The Modbus communication can be via Modbus TCP, Modbus RTU232, or Modbus RTU485.

The module and Slate will allow the user to parameterize each DeviceNet Device according to the parameters provided in the DeviceNet Device EDS file. These parameters can be saved in the DeviceNet Device's non-volatile memory.

The DeviceNet Router/B is configured using the Aparian Slate application. This program can be downloaded from www.aparian.com free of charge.

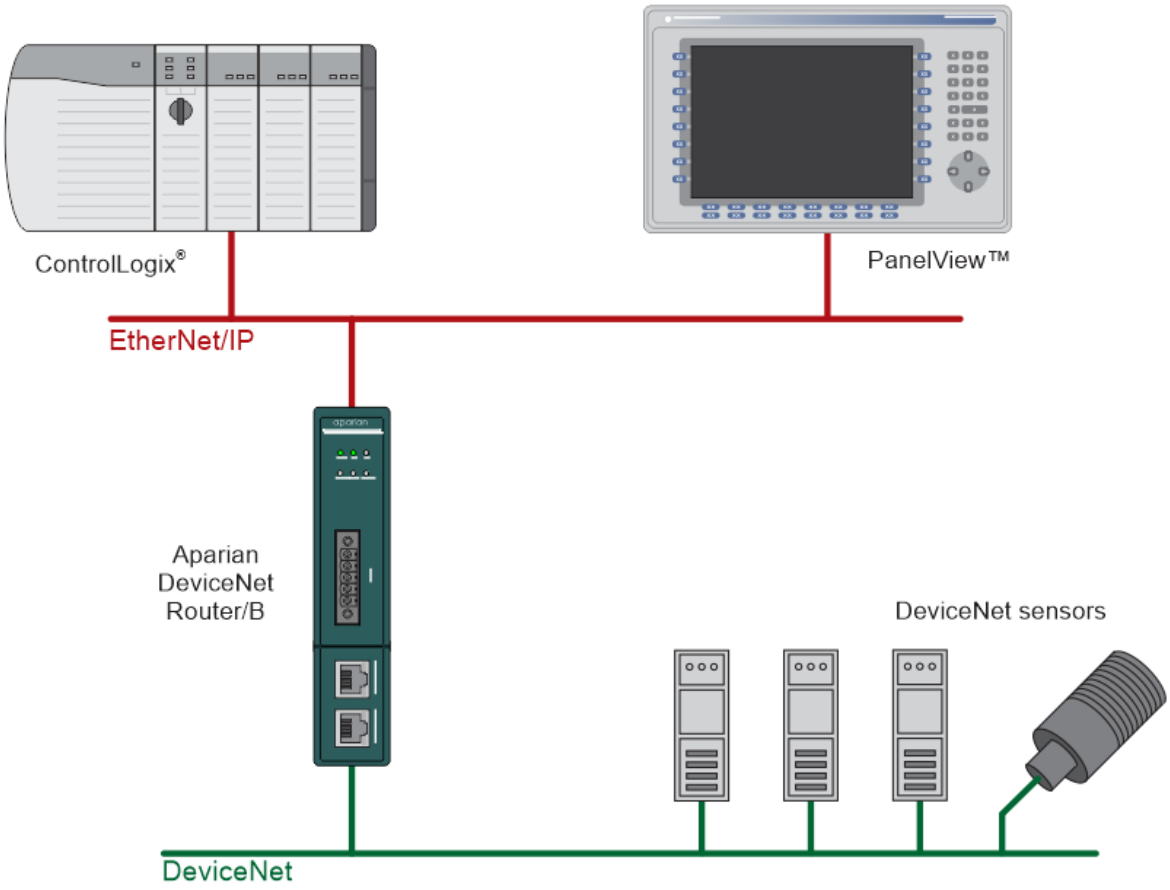

Figure 1.1. – Typical DeviceNet Scanner architecture using the DeviceNet Router/B

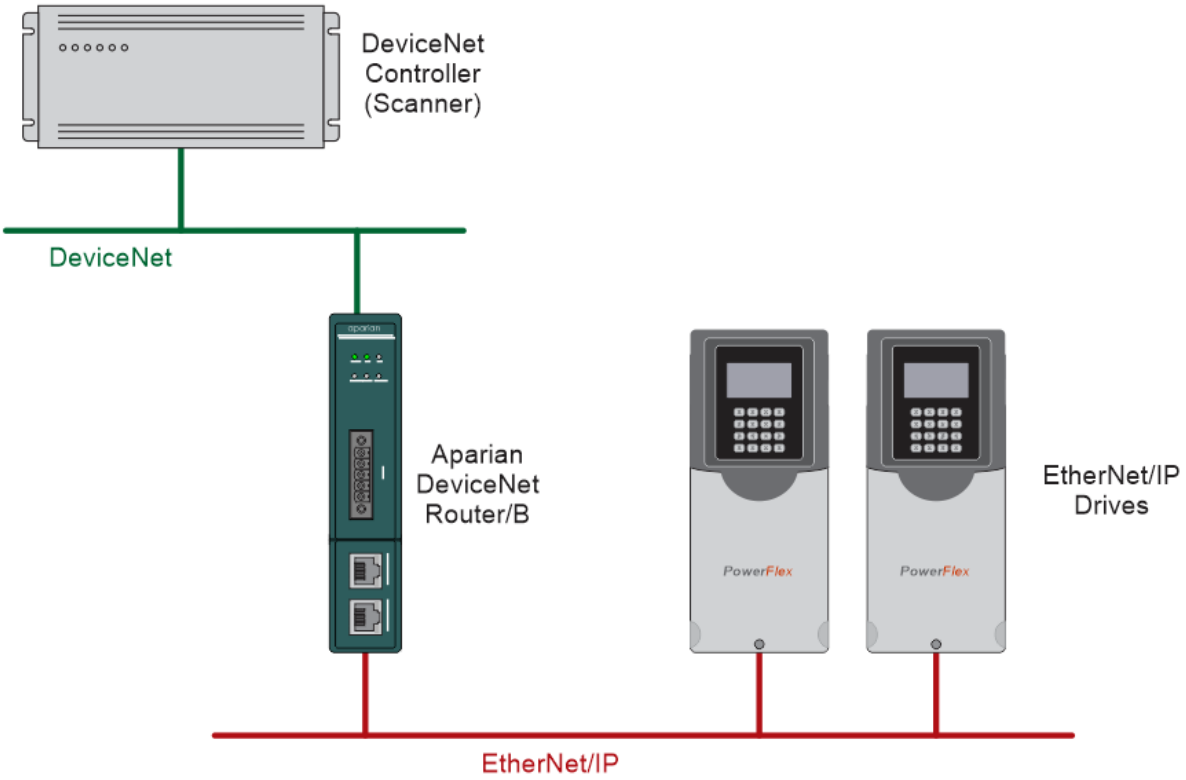

Figure 1.2. – Typical DeviceNet Device architecture using the DeviceNet Router

The module also provides a range of statistics, DeviceNet and Modbus packet capture functions, and internal Modbus and Data table reads to simplify the diagnostic process for remote diagnosis.

The module has two Ethernet ports and supports Device-Level-Ring (DLR) architectures.

A built-in webserver provides detailed diagnostics of system configuration and operation, including the display of DeviceNet operation and communication statistics, without the need for any additional software.

1.3. FEATURES

- Module can operate as a DeviceNet Scanner or Device.
- DeviceNet Scanner mode can configure and operate with up to 63 DeviceNet Devices with up to 256 bytes input and 256 bytes output per DeviceNet IO Device.
- DeviceNet Device mode can exchange up to 256 bytes of input and 256 bytes of output data with a DeviceNet Scanner.
- Supports DeviceNet Passthrough Messaging
- Supported DeviceNet Explicit Messaging
- Module has various Primary Interfaces:
    - PCCC Client for connecting new Ethernet only PanelViews to an existing DeviceNet network.
    - EtherNet/IP Target (Class 1 connection as well as Direct-To-Tag Logix tag access)
    - Modbus Server (TCP, RTU232, and RTU485)
    - Modbus Client (TCP, RTU232, and RTU485)
    - EtherNet/IP Originator (Class 1 connection with up to 10 EtherNet/IP devices and Explicit Messaging, including Direct-To-Tag Logix tag access, with up to 10 EtherNet/IP devices).
- Slate software provides a DeviceNet and Modbus packet capture utility for better diagnosis of issues.
- Supports all DeviceNet Baud Rates (125k, 250k, 500k).
- Dual Ethernet ports which support Device-Level-Ring (DLR).
- Network Time Protocol (NTP) supported for external time synchronization.
- Small form factor – DIN rail mounted.

1.4. ARCHITECTURE

The figures below provide an example of the typical network setup for connecting DeviceNet (device or scanner) to either EtherNet/IP or Modbus TCP/RTU232/RTU485.

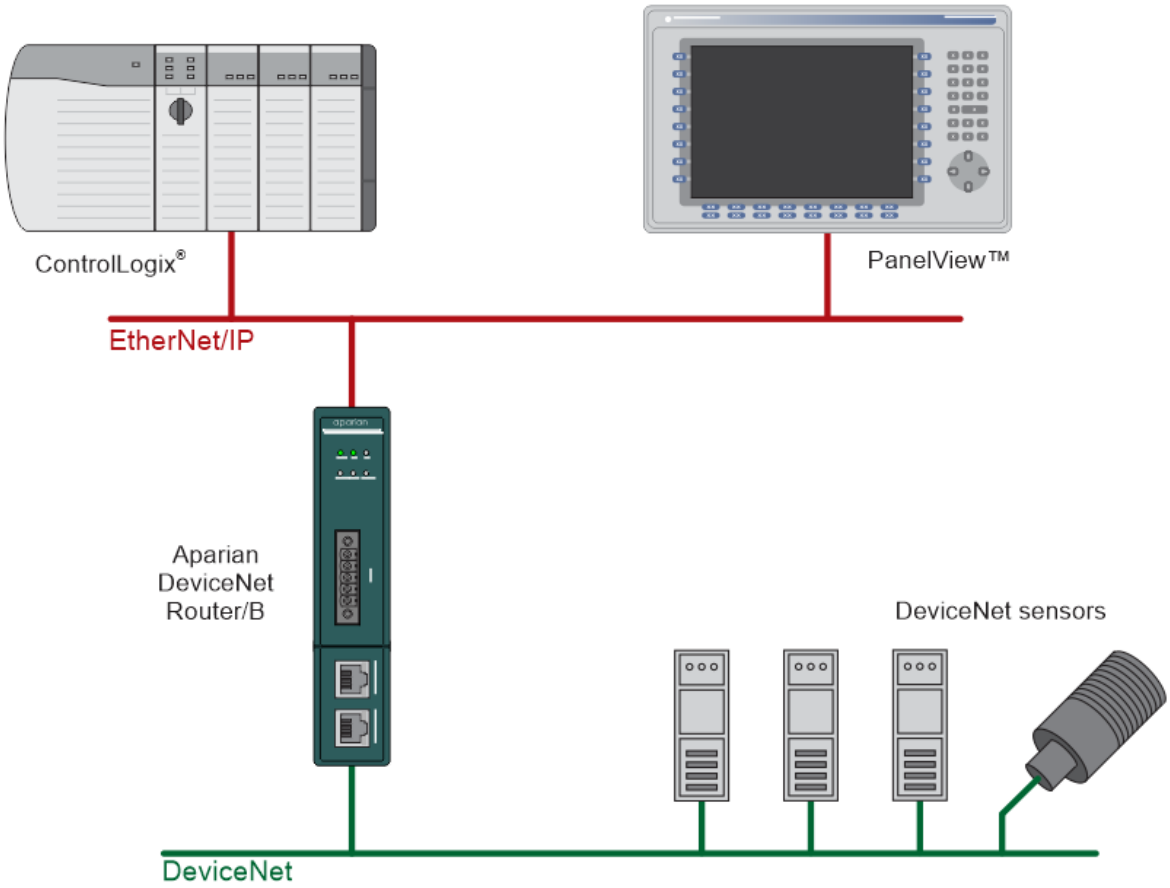

Figure 1.3. – Example of connecting DeviceNet Devices to a Logix Controller

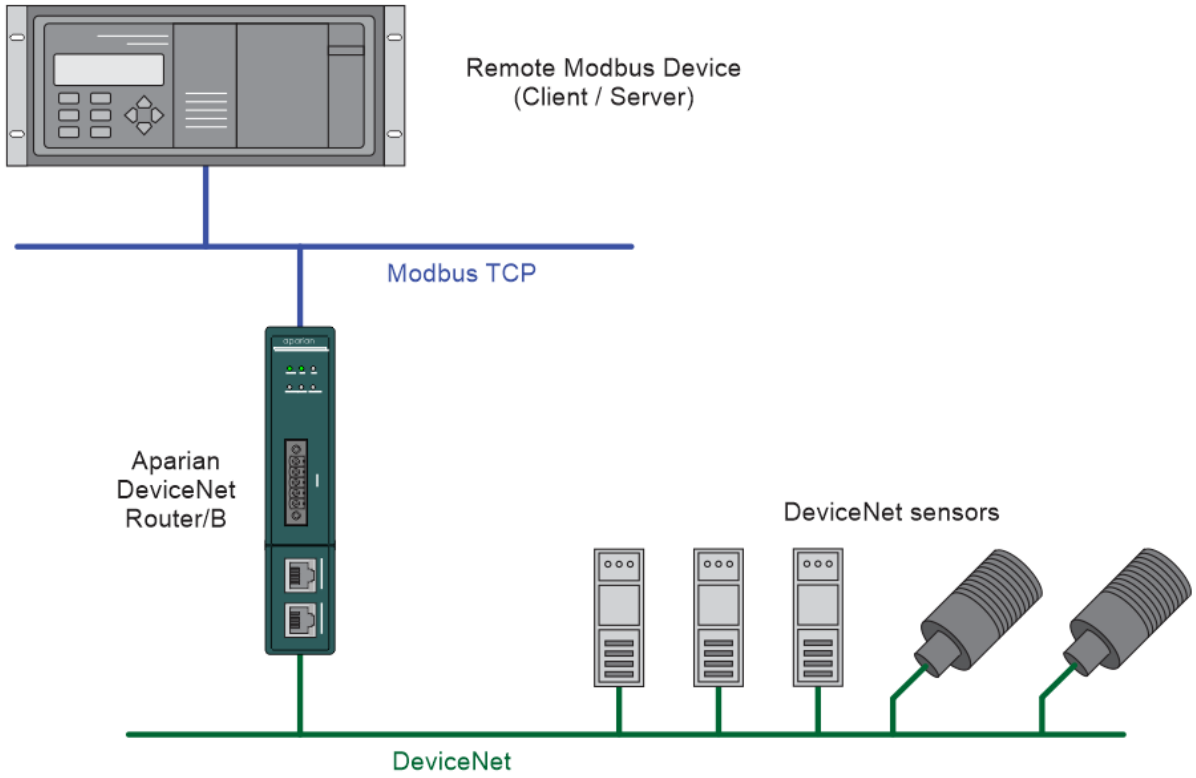

Figure 1.4. - Example of connecting DeviceNet Devices to a Modbus TCP Client or Server

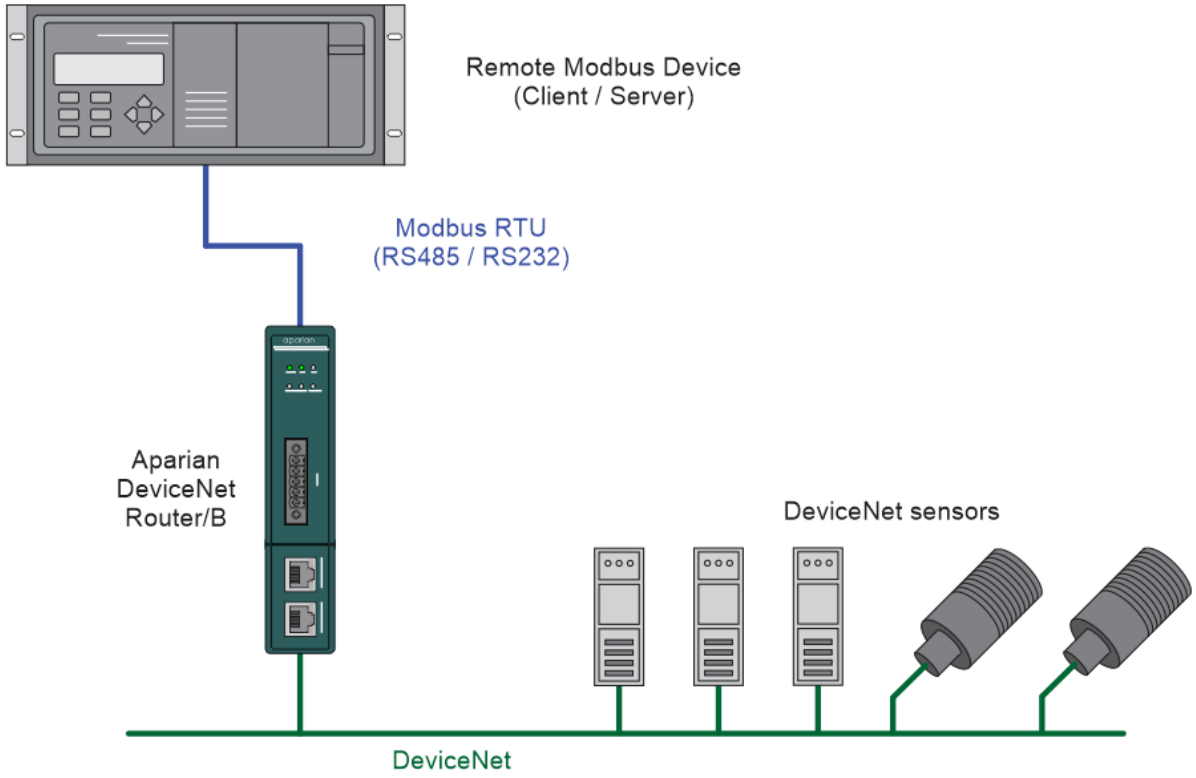

Figure 1.5. - Example of connecting DeviceNet Devices to a Modbus RTU Client or Server

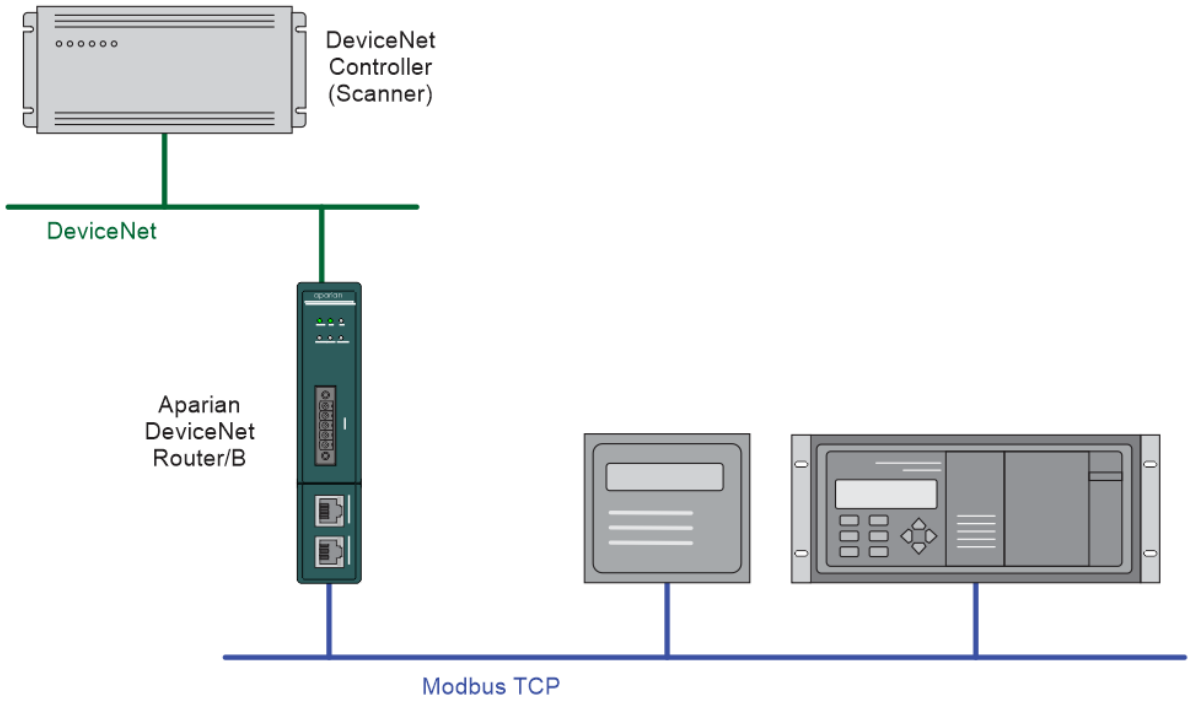

Figure 1.6. – Modbus TCP Device (Client or Server) operating as a DeviceNet Device

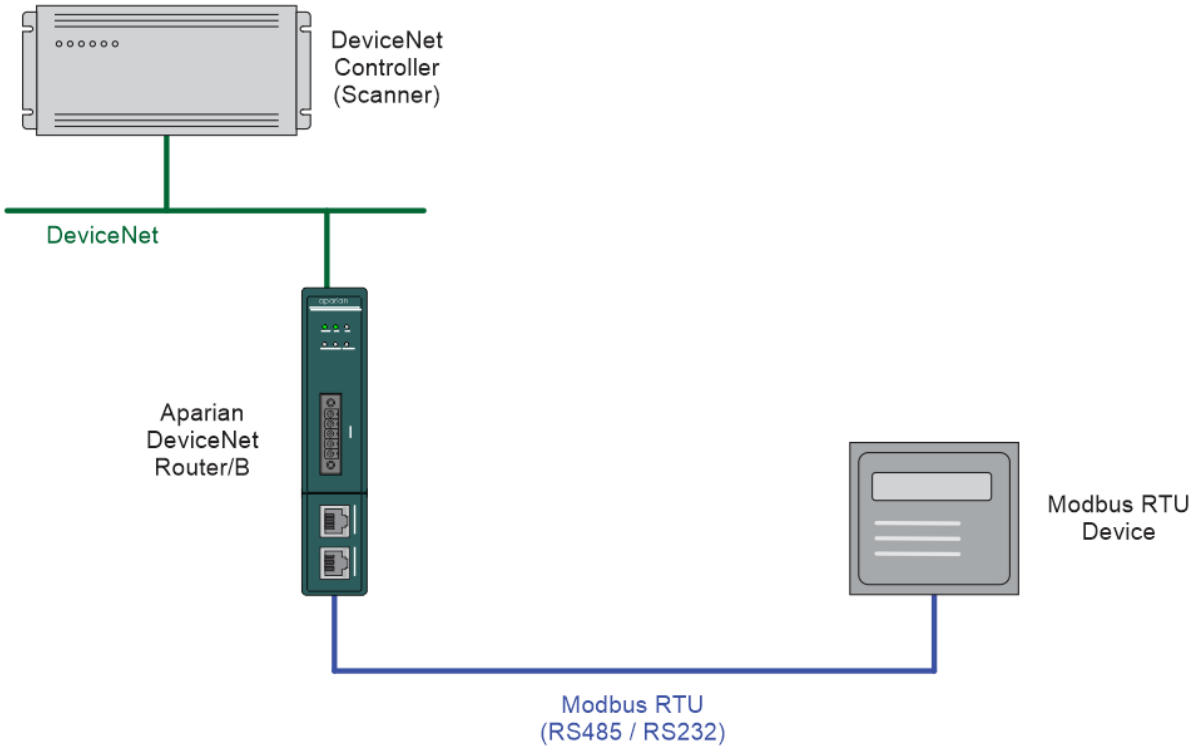

Figure 1.7. – Modbus RTU Device (Client or Server) operating as a DeviceNet Device

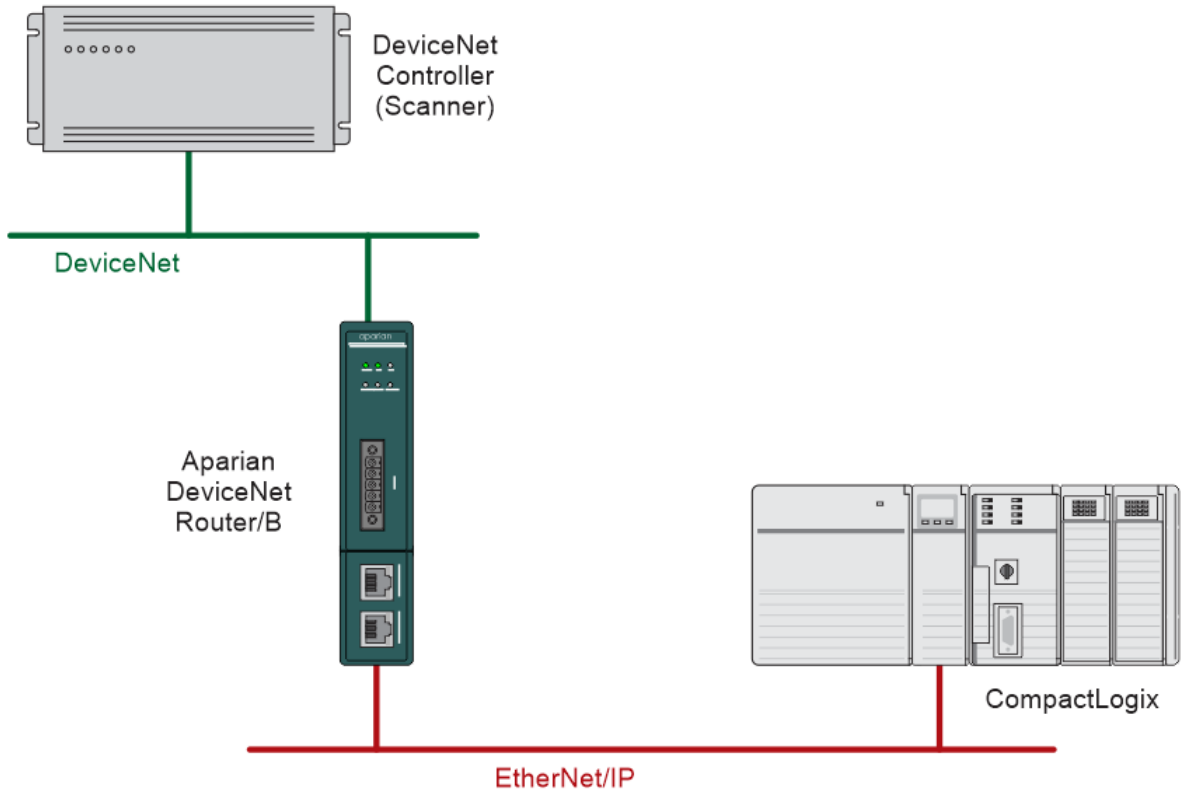

Figure 1.8. – Logix Controller operating as a DeviceNet Device via the DeviceNet Router

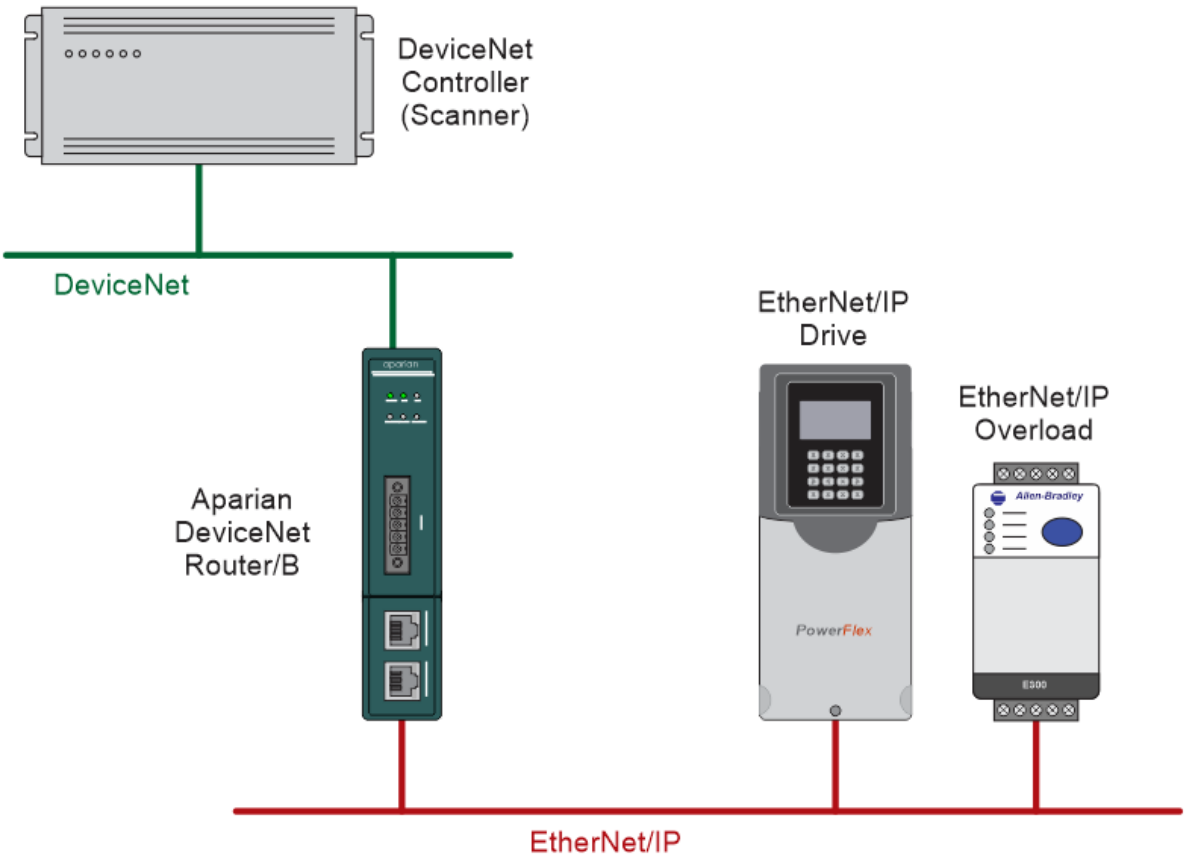

Figure 1.9. – EtherNet/IP Drive and Smart Overload operating as a DeviceNet Device

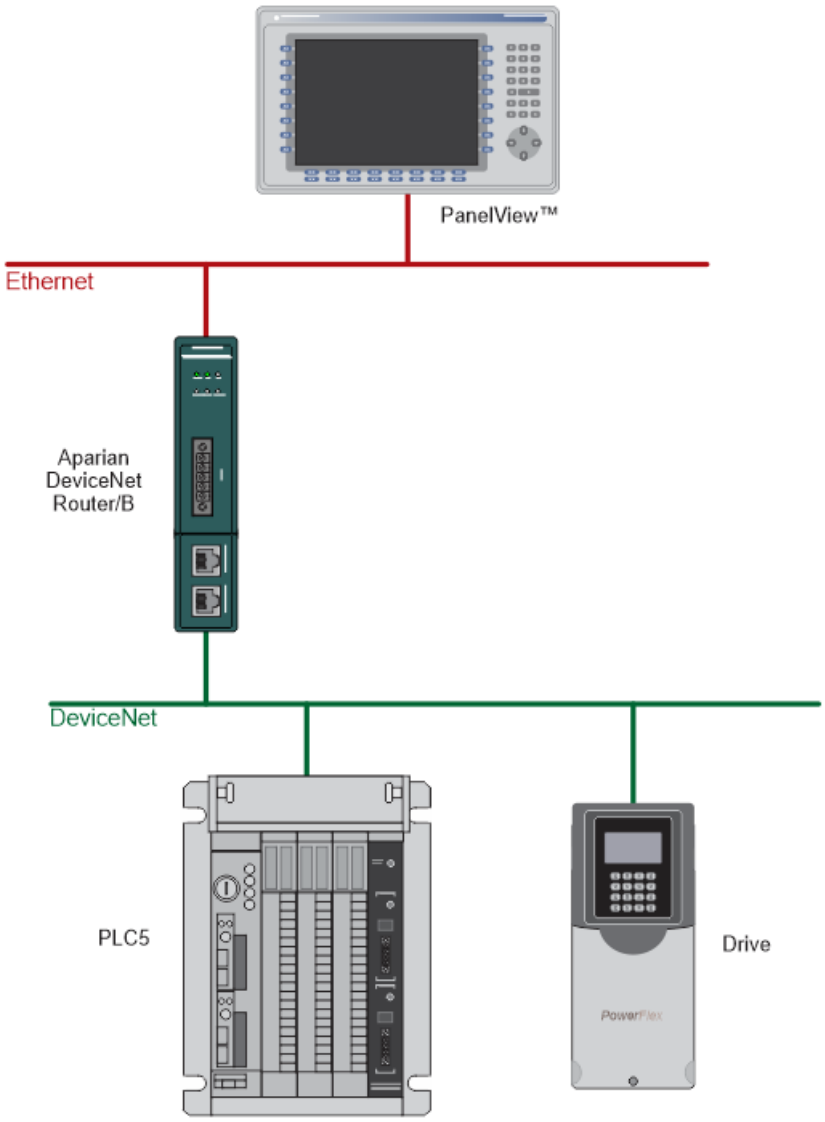

Figure 1.10. - Example of a typical network setup in PCCC Client Mode

2. TECHNICAL SPECIFICATIONS

2.1. DIMENSIONS

Below are the enclosure dimensions as well as the required DIN rail dimensions. All dimensions are in millimetres.

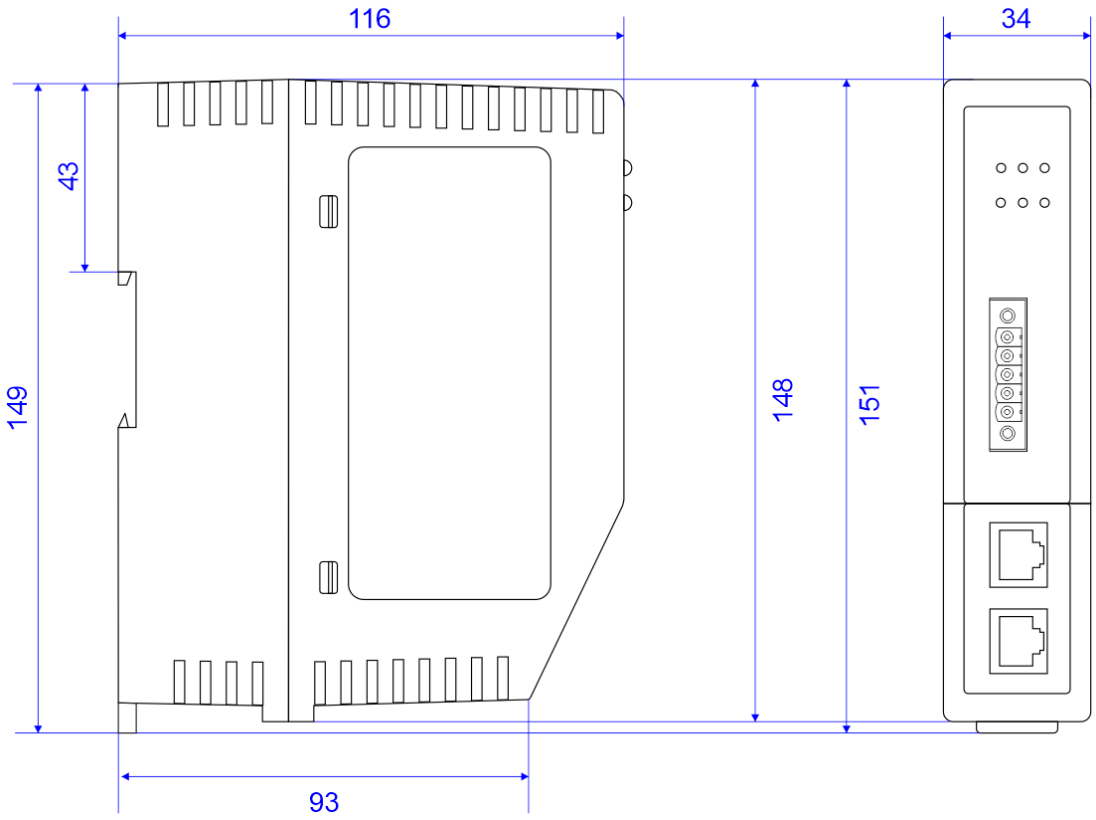

Figure 2.1 – DeviceNet Router/B enclosure dimensions

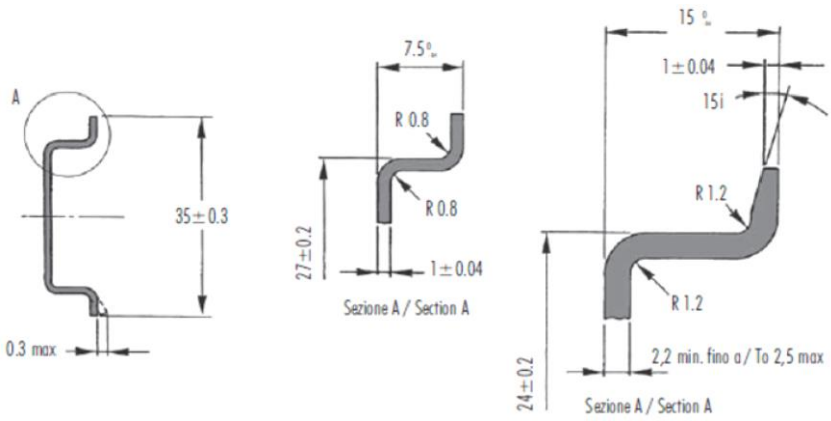

Figure 2.2 - Required DIN dimensions

2.2. ELECTRICAL

Specification	Rating
Power requirements	Input: 10 – 32V DC
Power consumption	2.2 W (Max.) Current: 180 mA @ 10 V Current: 85 mA @ 24 V
Connector	3-way terminal
Conductors	24 – 18 AWG
Enclosure rating	IP20, NEMA/UL Open Type
Temperature	-20 – 70 °C
Earth connection	Yes, terminal based
Emissions	IEC61000-6-4
ESD Immunity	EN 61000-4-2
Radiated RF Immunity	IEC 61000-4-3
EFT/B Immunity	EFT: IEC 61000-4-4
Surge Immunity	Surge: IEC 61000-4-5
Conducted RF Immunity	IEC 61000-4-6

Table 2.1 - Electrical specification

2.3. ETHERNET

Specification	Rating
Connector	RJ45
Conductors	CAT5 STP/UTP
ARP connections	Max 100
TCP connections	Max 100
CIP connections	Max 15
Communication rate	10/100Mbps
Duplex mode	Full/Half
Auto-MDIX support	Yes
Embedded switch	Yes, 2 x Ethernet ports
Device Level Ring (DLR)	Supported

Network Time Protocol (NTP)	Supported

Table 2.2 - Ethernet specification

2.4. SERIAL PORT (RS232)

Specification	Rating
RS232 Connector	9-way terminal (shared with RS485)
RS232 Conductor	24 – 18 AWG
Electrical Isolation	1000 Vdc
BAUD	1200, 2400, 4800, 9600, 19200, 38400, 57600, 115200
Parity	None, Even, Odd
Data bits	8
Stop bits	1

Table 2.3 – RS232 Serial Port specification

2.5. SERIAL PORT (RS485)

Specification	Rating
RS485 Connector	9-way terminal (shared with RS485)
RS485 Conductor	24 – 18 AWG
Electrical Isolation	1500 Vrms for 1 minute.
BAUD	1200, 2400, 4800, 9600, 19200, 38400, 57600, 115200
Parity	None, Even, Odd
Data bits	8
Stop bits	1

Table 2.4 – RS485 Serial Port specification

2.6. DEVICENET

Specification	Rating
Connector	5-way terminal, 5.08mm pitch.
Modes	DeviceNet Scanner

	DeviceNet Target
Passthrough Messaging	Supported
Supported Baud Rates	125k 250k 500k
DeviceNet Terminator	120 Ω - Software Enabled

Table 2.5 – DeviceNet specification

2.7. DEVICENET SCANNER

Specification	**Rating**
DeviceNet Device Count	63
Set Target Device Node	Supported
Set Target Device BAUD	Supported
Device Discovery	Supported
Explicit Messaging	Supported
Connections Supported	Polled Change of State (COS)

Table 2.6 – DeviceNet Scanner specification

2.8. DEVICENET TARGET

Specification	**Rating**
Connections Supported	Polled Change of State (COS)
Input / Output Data Max	256 bytes input 256 bytes output

Table 2.7 – DeviceNet Device specification

2.9. PCCC

Specification	Rating
Max PCCC Connections	20
Max PCCC Payload	1000 bytes

Table 2.8 – PCCC specification

2.10. ETHERNET/IP TARGET

Specification	Rating
Class 1 Cyclic connection count	4
Logix Direct-to-Tag Supported	Yes

Table 2.9 – EtherNet/IP Target specification

2.11. ETHERNET/IP ORIGINATOR

Specification	Rating
Class 1 Cyclic Connections Supported	Yes
Class 3 / UCMM Connections Supported	Yes
Class 1 Connection Count	10
Class 3 / UCMM Target Device Count	10
Class 3 / UCMM Mapping Count	50

Table 2.10 – EtherNet/IP Originator specification

2.12. MODBUS CLIENT

Specification	Rating
Modes Supported	Modbus TCP, Modbus RTU232, Modbus RTU485
Modbus RTU485 Termination	125 Ω - Software Enabled
Max. Modbus Server Devices	20
Max. Modbus Mapping	100
Mapping Ranges	Holding Register 0 – 65535

	Input Register 0 – 65535 Input Status 0 – 65535 Coil Status 0 – 65535
Base Offset	Modbus (Base 0) PLC (Base 1)
Configurable Modbus TCP Port	Yes
Data Reformatting Supported	BB AA BB AA DD CC CC DD AA BB DD CC BB AA

Table 2.11 – Modbus Client specification

2.13. MODBUS SERVER

Specification	**Rating**
Modes Supported	Modbus TCP, Modbus RTU232, Modbus RTU485 (simultaneous)
Modbus RTU485 Termination	Software set
Mapping Ranges	Holding Register 0 – 65535 Input Register 0 – 65535 Input Status 0 – 65535 Coil Status 0 – 65535
Base Offset	Modbus (Base 0) PLC (Base 1)
Configurable Modbus TCP Port	Yes

Table 2.12 – Modbus Server specification

2.14. CERTIFICATIONS

Certification	**Mark**
CE Mark	CE
RoHS2 Compliant	RoHS2

UL Mark File: E494895	 CLASS 1, DIV 2, GROUPS A, B, C, D
UKCA	
ATEX	 II 3 G Ex ec IIC T5 -25°C ≤ Ta ≤ 70 °C

Table 2.13 – Certifications