CANopen Router

CANopen to EtherNet/IP and Modbus-TCP Router

CANopen to Logix

CANopen to Modbus-TCP

Master or Slave Mode

Up to 64 nodes (master)

Up to 16 PDOs per device

Direct-to-Tag Technology

Built-In Packet Analyser

DIN Rail Mount

Easy to configure

The CANopen Router provides a powerful and easy to configure solution to exchange data between CANopen devices and a Logix controller via EtherNet/IP, or a Modbus master via Modbus-TCP.

The module can operate as a CANopen Master exchanging data with multiple configured slave device, or as a CANopen slave where it can emulate a CANopen slave device.

Configuration is simplified through the use of Aparian's Slate configuration utility. When selecting the Logix option (EtherNet/IP), Aparian's Direct-To-Tag technology allows the user to simply browse for Logix tags and associate them to the CANopen device's PDOs.





The Slate configuration software also provides a utility to read and write CANopen device parameters (SDOs). Critical parameter values can be stored within the project and later written to the device to simplify device replacement.

The CANopen Router is packed with diagnostic information including an on-board CANopen packet capture utility, CAN Discovery and node Live List.

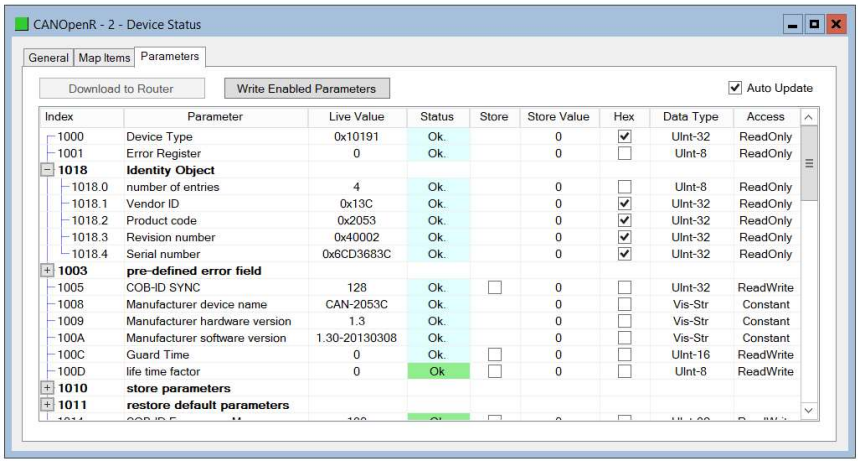

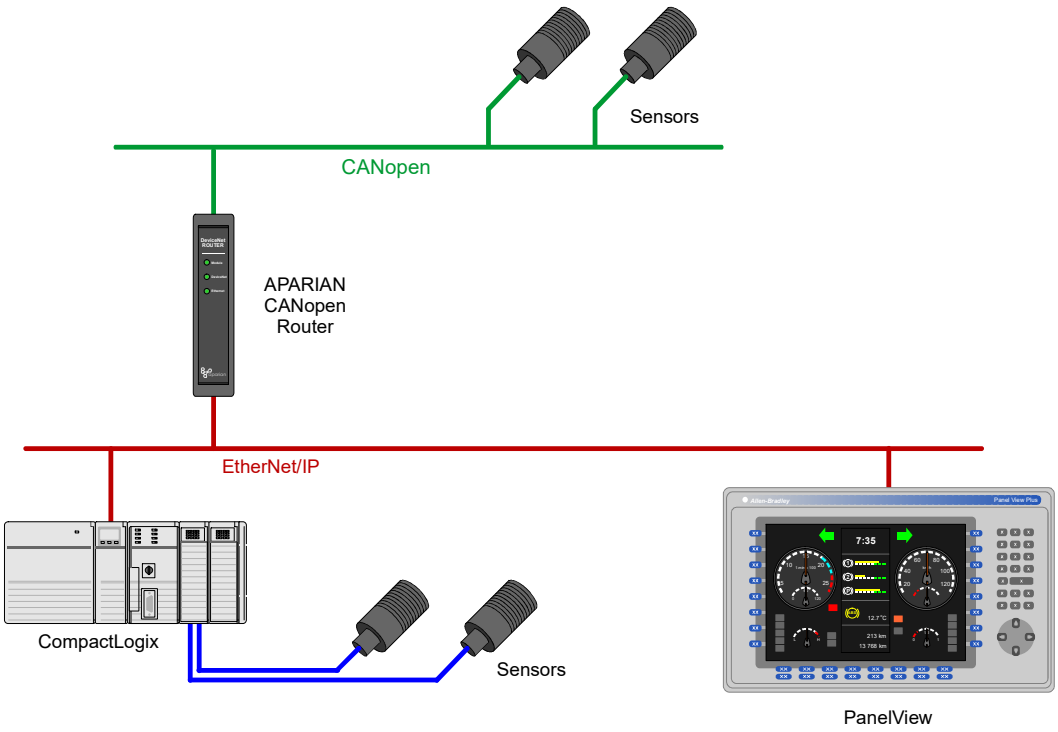

Specifications

Parameter	Rating
Power requirements	10 - 28 VDC (70mA @ 24VDC)
Operating temperature	-20 - 70 °C
CANopen BAUD Supported	50k, 125k, 250k, 500k, 800k, 1M
CiA 443 Support	Yes
Ethernet	10/100 Mbps, Full/Half Duplex, Auto-MIDX
Max CANopen Slaves (Master)	64
Max PDOs per Device	16

c UL us LISTED
CL 1 DIV 2 GRP A,B,C,D
E494895

CANopen Router A-CANOR

Aparian Inc.
24 Twain Str
Irvine,
CA, 92617

Tel. (949) 445 4109
sales@aparian.com
www.aparian.com

aparian