PMIO Scanner

Quick Start Guide

1756-A-PMIO

NOTE: Before installing, configuring, operating, or maintaining Aparian products, please review this information and the information located on www.aparian.com for the latest software, documentation, and installation files specific to your Aparian product.

INTRODUCTION

The PMIO Scanner provides interfacing between a Rockwell Automation ControlLogix system and Honeywell's TDC 3000 PM/HPM/APM Input/Output Processors (IOPs).

The PMIO Scanner plugs directly into a ControlLogix chassis and connects directly into the TDC 3000 redundant I/O Link.

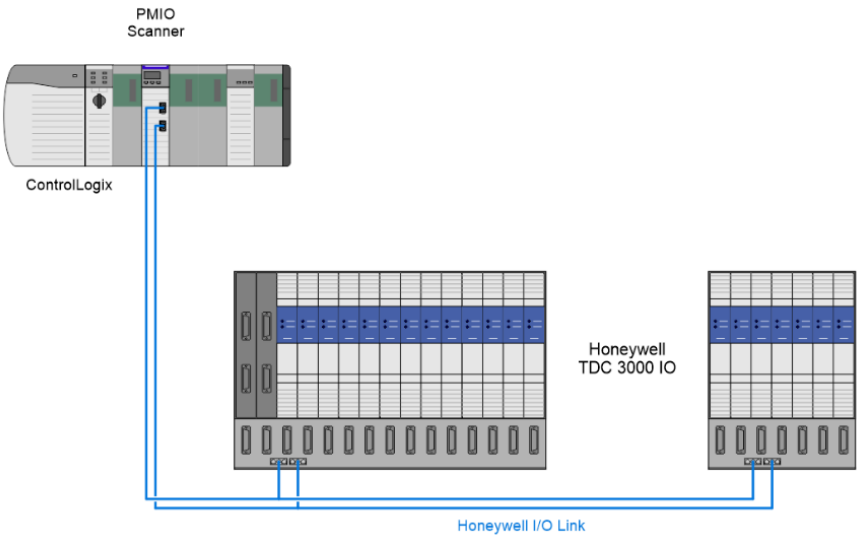

NOTE: ***TDC 3000*** and ***Process Manager*** are registered trademarks of Honeywell Inc.

REQUIRED SOFTWARE

The PMIO Scanner requires Aparian Slate software to setup and configure. The software installation can be found at www.aparian.com/software/slate.

MODULE INSTALLATION

The PMIO Scanner is a standard single slot ControlLogix module and fits directly into any ControlLogix chassis. All required power for the module is derived from the ControlLogix backplane. On the front of the module are 2 x 3-way communication connectors for the redundant I/O Link to the Honeywell IOP Rack(s).

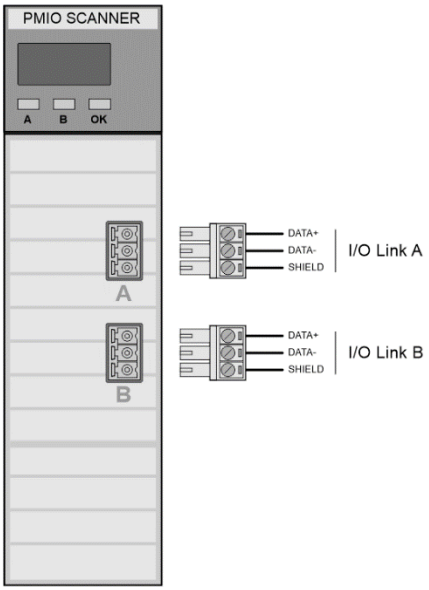

LED	Description
Ok	The module LED will provide information regarding the system-level operation of the module. If the LED is red, then the module is not operating correctly. For example, if the module application firmware has been corrupted or there is a hardware fault the module will have a red Module LED. If the LED is green (flashing), then the module has booted and is running correctly without any application configuration loaded. If the LED is green (solid), then the module has booted and is running correctly with application configuration loaded.
A / B	LED A represents Channel A of the I/O Link and LED B represents Channel B of the I/O Link. Each time a valid packet is received on a specific channel the relevant LED will flash green. When a corrupted packet is received the relevant LED will flash red.

I/O LINK

The pair of 3-way I/O Link connectors are used to connect to the TDC 3000 I/O. The details of the I/O Link connector are shown below.

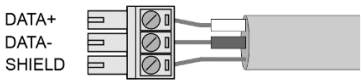

Custom-length I/O Link cables, as shown below, are available from Aparian. To simplify installation, these cables are designed to be inserted between an existing I/O Link cable and the I/O rack. These cables are not supplied with the PMIO Scanner and must be ordered separately.

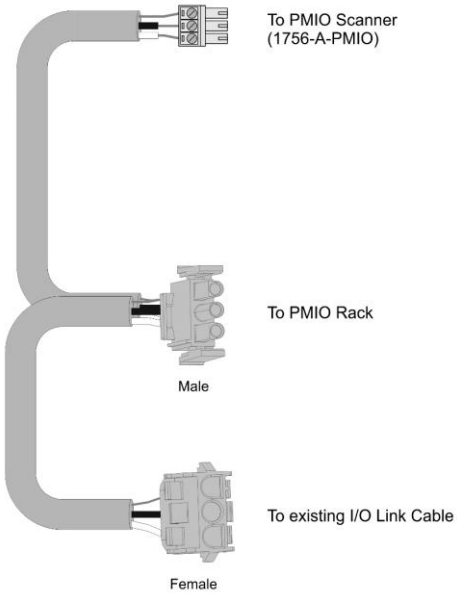

WARNING: Connecting the PMIO Scanner to a running application may disrupt the Honeywell system. Ensure the application is in a safe state before connecting the PMIO Scanner and associated I/O Link cables. It is also recommended to configure the PMIO in either *Disabled* or Shadow mode when first connecting to the I/O Link network. Failure to do so may result in equipment damage, serious injury or death.

STUDIO 5000 CONFIGURATION

NOTE: The minimum Studio 5000 version that can be used is v21. The PMIO Scanner uses an Add-On Profile (AOP) for the 1756 Backplane.

The user will first need to install the PMIO Scanner AOP before the module can be added to the Logix I/O tree. The AOP for the PMIO Scanner can be downloaded from the Aparian website: http://www.aparian.com/software/aop. Once downloaded extract the zip file, run the *MPSetup.exe* file, and follow the on-screen instructions.

ADDITIONAL CONSIDERATIONS

TERMS

Honeywell and Rockwell Automation (Allen-Bradley) use different terms and nomenclatures which can complicate the migration process.

NUMBERING

Honeywell numbering typically starts at 1. For example, the first IO point on an IOP will be 1. Rockwell numbering typically starts at 0. Care must be taken to adjust for this offset when viewing Honeywell IO in a Logix system.

NORTH AMERICAN HAZARDOUS LOCATION APPROVAL

The following information applies when operating the product in hazardous locations:

SUITABLE FOR USE IN CLASS I, DIVISION 2, GROUPS A, B, C AND D HAZARDOUS LOCATIONS, OR NONHAZARDOUS LOCATIONS ONLY.
-20°C to +70°C, T5A
Class 1, Div 2 Gps A, B, C, D

THIS EQUIPMENT IS OPEN-TYPE DEVICE AND IS MEANT TO BE INSTALLED IN AN ENCLOSURE SUITABLE FOR THE ENVIRONMENT SUCH THAT THE EQUIPMENT IS ONLY ACCESSIBLE WITH THE USE OF A TOOL.

WARNING - EXPLOSION HAZARD - DO NOT DISCONNECT EQUIPMENT WHILE THE CIRCUIT IS LIVE OR UNLESS THE AREA IS KNOW TO BE FREE OF IGNITABLE CONCENTRATIONS.

WARNING - EXPLOSION HAZARD - SUBSTITUTION OF ANY COMPONENT MAY IMPAIR SUITABILITY FOR CLASS I, DIVISION 2.



For professional users in the European Union

If you wish to discard electrical and electronic equipment (EEE), please contact your dealer or supplier for further information.



WARNING – Cancer and reproductive harm – www.p65warnings.ca.gov

ADDITIONAL INFORMATION

The following resources contain additional information that can assist the user with the module installation and operation.

Resource	Link
Slate Installation	www.aparian.com/software/slate
Add-On Profile Installation	http://www.aparian.com/software/aop
ControlLogix Installation	https://literature.rockwellautomation.com/idc/groups/literature/documents/in/1756-in621_-en-p.pdf

SUPPORT

Technical support will be provided via the Web (in the form of user manuals, FAQ, datasheets etc.) to assist with installation, operation, and diagnostics.

For additional support the user can use either of the following:

Contact Us web link	www.aparian.com/contact-us
Support email	support@aparian.com