ControlNet Router

(Enhanced)

Firmware Revision v1.001.010+

Datasheet

A-CNR

Document No. D138-017
09/2026
Revision 1.6

aparian

CONTENTS

1. Preface 3
1.1. About this document 3
1.2. Introduction 3
1.3. Features 7
1.4. Architecture 8
Ethernet-Only PanelView interface 8
EtherNet/IP Target to ControlNet IO (Scheduled ControlNet) 10
Modbus TCP Slave to ControlNet IO (Scheduled ControlNet) 11
ControlNet Target (Scheduled) to EtherNet/IP IO (Class 1) 11
ControlNet Target (Scheduled) to Modbus TCP Slaves 12
2. Technical Specifications 14
2.1. Dimensions 14
2.2. Electrical 15
2.3. Ethernet 15
2.4. ControlNet 16
2.5. ControlNet Target 16
2.6. ControlNet Originator 16
2.7. ControlNet Bridge 17
2.8. PCCC 17
2.9. EtherNet/IP Target 17
2.10. EtherNet/IP Originator 18
2.11. Modbus TCP Master 18
2.12. Modbus TCP Slave 19
2.13. Certifications 19

1. PREFACE

1.1. ABOUT THIS DOCUMENT

This document contains the technical data for the ControlNet Router Enhanced. The ControlNet Router (Enhanced) is defined as the ControlNet Router with firmware revision 1.001.010 (or later) being used with Slate v1.057 (or later).

1.2. INTRODUCTION

The ControlNet Router provides intelligent data routing between either EtherNet/IP or Modbus TCP/RTU and a ControlNet network. This allows the user to integrate ControlNet devices into a EtherNet/IP based Rockwell Logix platform (e.g., ControlLogix or CompactLogix) or any Modbus Master or Slave device with minimal effort.

The ControlNet Router also provides intelligent data routing between ControlNet and Ethernet PCCC (CSP). This will allow the user to connect new PanelView Plus devices (with no ControlNet interface) to existing ControlNet networks.

The **ControlNet Mode** can be configured to be either of the following two interface modes:

Target
A Logix controller can own the ControlNet Router over ControlNet using a scheduled ControlNet connection when the ControlNet Router is operating as a ControlNet target. This will allow the ControlNet Router to exchange data with the Logix controller using the input and output assembly of the scheduled ControlNet connection. Data from EtherNet/IP or Modbus TCP devices can be mapped to the Logix controller over ControlNet.

Bridge
When the ControlNet Router is operating in Bridge Mode, it will allow the user to add, configure, and parameterize ControlNet IO via the ControlNet Add-on Profile (AOP) in Logix. ControlNet devices can be added under the A-CNR AOP which will operate as a ControlNet bridge. In this mode the ControlNet Router will operate as a ControlNet originator and Keeper, but the ControlNet network will be dynamically Scheduled as ControlNet Connections are established.

In Bridge Mode, the ControlNet Router will automatically become an EtherNet/IP Target, allowing a newer Logix Controller, to own ControlNet IO via the ControlNet Router in the Studio5000 environment. This will allow for Rack Optimized connections in Logix. A maximum of 30 scheduled connections can be used in bridge mode (where

rack optimized adapters will only use one connection for all devices in the local rack that support Rack Optimization).

The user will also be able to parameterize ControlNet devices (e.g., PowerFlex drive) from the Logix environment using the ControlNet device AOP.

Originator

As a ControlNet originator, the module can use one of two methods to read and write data to and from ControlNet IO:

- **Scheduled ControlNet**

  The ControlNet Router can be configured to own ControlNet IO by using the Slate software to configure the IO connections and schedule the ControlNet network.

  Each ControlNet Router (when hardware scheduled) can own up to 10 ControlNet devices with up to 500 bytes of input data per connection and a total maximum of 205 to 277 bytes of output data (depending on the number of connections used). See the ControlNet Originator section for more details regarding the ControlNet originator connection sizes.

  Each ControlNet Router (when software scheduled) can own up to 30 ControlNet devices with up to 500 bytes of input and output data per connection.

  Multiple ControlNet Routers can exist on the same ControlNet network with the Slate software having the ability to schedule all of the ControlNet Routers on the network with originator IO connections and downloading the ControlNet Keeper configuration into one of the ControlNet Routers. Data from the ControlNet IO (via the IO input and output assemblies) can be exchanged with any of the Ethernet mode interfaces (e.g. EtherNet/IP Target or Modbus TCP Slave).

- **ControlNet Explicit Messaging**

  This allows the ControlNet Router to exchange data with up to 10 ControlNet devices using explicit messaging over ControlNet. The module can Get or Set data in the remote ControlNet devices with Custom Class, Instance, Attribute values.

The **Ethernet Mode** can be configure to be any of the following five interface modes:

PCCC Client

The support for Ethernet PCCC (CSP) allows the module to emulate a PLC5 or SLC providing a legacy interface for PanelViews and other devices over scheduled ControlNet. This will allow an Ethernet-only PanelView to exchange data with a Logix controller using an existing ControlNet connection.

EtherNet/IP Target

A Logix controller can own the ControlNet Router over EtherNet/IP using a class 1 connection when the ControlNet Router is operating as a EtherNet/IP Target. This will allow the ControlNet Router to exchange data with the Logix controller using the input and output assembly of the EtherNet/IP Class 1 connection. Data from ControlNet devices (when operating as a ControlNet Originator) or Controllers on ControlNet (when operating as a ControlNet Target) can be mapped to the Logix controller over EtherNet/IP.

EtherNet/IP Originator

As an EtherNet/IP originator, the module can use one of three methods to read and write data to and from the EtherNet/IP network:

- **EtherNet/IP Class 1 Connection**

  The ControlNet Router can be configured to own EtherNet/IP IO by using the Slate software to configure the Class 1 connections. Each ControlNet Router can own up to 16 EtherNet/IP devices. Data from the EtherNet/IP IO (via the input and output assemblies) can be exchanged with the ControlNet network (when operating as either a ControlNet Target or Originator).

- **EtherNet/IP Explicit Messaging**

  This allows the ControlNet Router to exchange data with up to 10 EtherNet/IP devices using explicit messaging over EtherNet/IP. The module can use either **Class 3**, Unconnected Messaging (**UCMM**), or **Logix Tag** to Get and Set data in the remote EtherNet/IP devices with configurable Class, Instance, Attribute values (when using UCMM or Class 3). Logix Tag messages are used to exchange data with a Logix controller by directly writing to or reading from Logix tags. The user can browse to the Logix controller (using the Slate Target Browser) as well as browse the Logix Controller Tag list (using the Slate Tag Browser) to select the desired destination Tag.

Modbus TCP Master

The data from either ControlNet IO (when operating as a ControlNet originator) or ControlNet input and output assemblies (when operating as a ControlNet Target) will be written to, or read from, the module's internal Modbus Registers. The Modbus Auxiliary Map can then be used to configure the Modbus data exchange between multiple remote Modbus Slave devices and the module's internal Modbus registers. The Modbus communication utilizes Modbus TCP.

Modbus TCP Slave

The data from either ControlNet IO (when operating as a ControlNet originator) or ControlNet input and output assemblies (when operating as a ControlNet Target) will

be written to, or read from, the module's internal Modbus Registers using the internal mapping functions. These Modbus registers can be accessed by a remote Modbus Master using Modbus TCP.

The ControlNet Router uses an internal mapping strategy allowing the user to map any data from any supported interface to any other supported interface. Slate provides an online import tool for existing Logix controllers with IO connections to assist with the setup and configure of originator connections (EtherNet/IP or ControlNet).

The ControlNet Router can also be used to go online and program a Logix controller over ControlNet using an Ethernet connection from the local PC.

The module provides a range of statistics on Ethernet and ControlNet to assist with fault finding. A built-in webserver provides detailed diagnostics of system configuration and operation, including the display of ControlNet operation and communication statistics, without the need for any additional software.

The ControlNet Router is configured using the Aparian Slate application. This program can be downloaded from www.aparian.com free of charge.

1.3. FEATURES

- The module has the following ControlNet operating modes:
    - **ControlNet Target**, where the ControlNet Router can be owned by a controller over scheduled ControlNet.
    - **ControlNet Bridge,** where the A-CNR owns ControlNet IO over a scheduled ControlNet connection, by using the A-CNR Add-on Profile (AOP) in Logix. The ControlNet IO will be added and configured in Logix while the ControlNet Router will dynamically schedule the ControlNet network as connections are established. This will allow for Rack Optimized connections in Logix.
    - **ControlNet Originator**, where the ControlNet Router owns ControlNet IO over a scheduled ControlNet connection.
- The module has the following Ethernet operating modes:
    - **PCCC Client,** allowing the ControlNet Router to emulate a PLC5 or SLC to exchange data with Ethernet-only PanelViews.
    - **EtherNet/IP Target,** where the ControlNet Router can be owned by a controller via a Class 1 EtherNet/IP connection.
    - **EtherNet/IP Originator,** where the ControlNet Router owns EtherNet/IP IO using a Class 1 EtherNet/IP connection.
    - **Modbus TCP Master,** where the ControlNet Router module can exchange data with Modbus TCP Slaves.
    - **Modbus TCP Slave,** where the ControlNet Router module can exchange data with a Modbus TCP Master.
- The ControlNet network can be scheduled using the Slate software environment.
- ControlNet Router can operate as **ControlNet Keeper**.
- Support for **PLC5 IO** (via the 1771-ACNR15 ControlNet adapter) when operating in Bridge Mode.
- Multiple ControlNet Routers can own ControlNet IO on the ControlNet network.
- Supports **Redundant ControlNet**.
- Supports **Promiscuous Capture** mode allowing the ControlNet Router to capture all traffic on the ControlNet network.
- Supports unscheduled ControlNet allowing **Logix programming** over ControlNet.
- Dual Ethernet ports which supports Device-Level-Ring (**DLR**).
- Network Time Protocol (**NTP**) supported for external time synchronization.
- ControlNet, EtherNet/IP, and Modbus **Statistics** and packet captures providing diagnostic data for fault finding.
- Built-in webserver providing (read-only) diagnostics.
- Small form factor – DIN rail mounted.

1.4. ARCHITECTURE

Various architectures can be supported by the ControlNet Router for interfacing various Ethernet protocols to ControlNet.

ETHERNET-ONLY PANELVIEW INTERFACE

When set to PCCC Client Mode, the ControlNet Router provides an interface between modern Rockwell Automation PanelView Plus HMIs (without any ControlNet interface) and existing ControlNet networks using either Unscheduled or Scheduled ControlNet.

When using unscheduled ControlNet, the ControlNet Router can be used as a drop-in replacement for existing legacy PanelView HMI's by simply changing the RSLinx path.

When using scheduled ControlNet, the ControlNet Router can be configured to allow for up to 400 bytes of input data and 400 bytes of output data to be exchanged with the Logix Controller. The ControlNet Router will emulate a PLC5 controller which is used by the PanelView HMI to map PLC5 Files (e.g. N7 or F8) to the Logix input and output assembly over scheduled ControlNet. The consumed (ControlNet) data can be mapped to a PLC5 type address file, N9 and F10, and then read by an Ethernet device e.g. a PanelView. Similarly, the produced (ControlNet) data can also be mapped to a PLC5 type address file, N7 and F8, to which an Ethernet device could write.

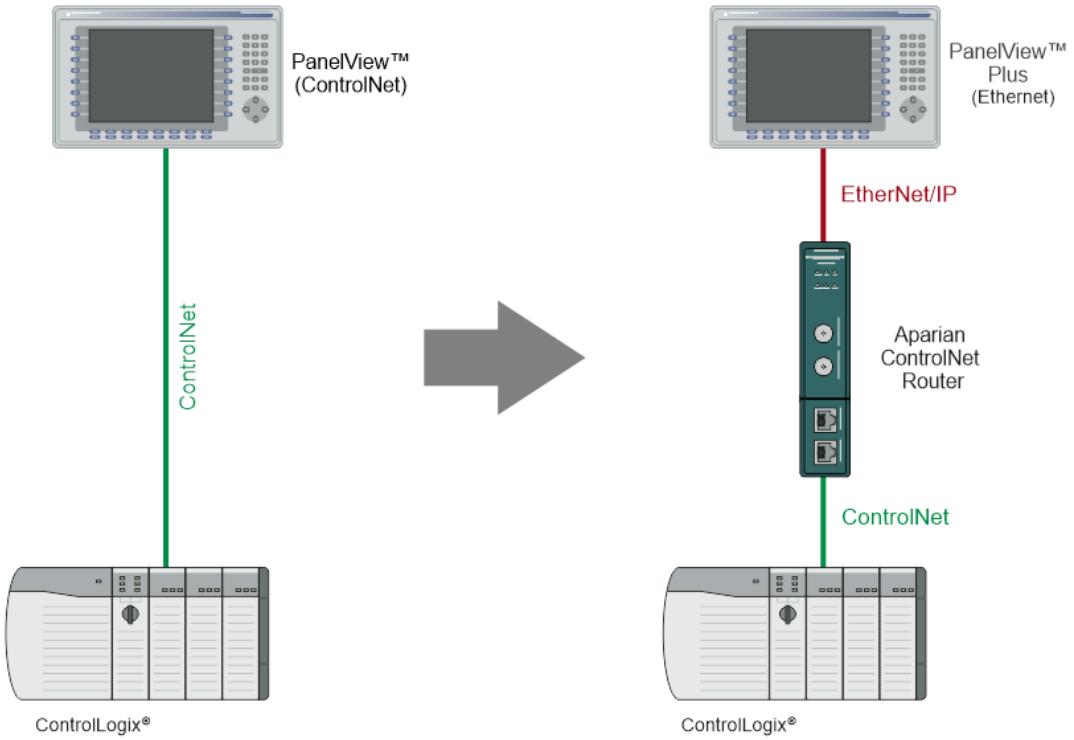

Figure 1.1 – Typical Setup for PanelViews

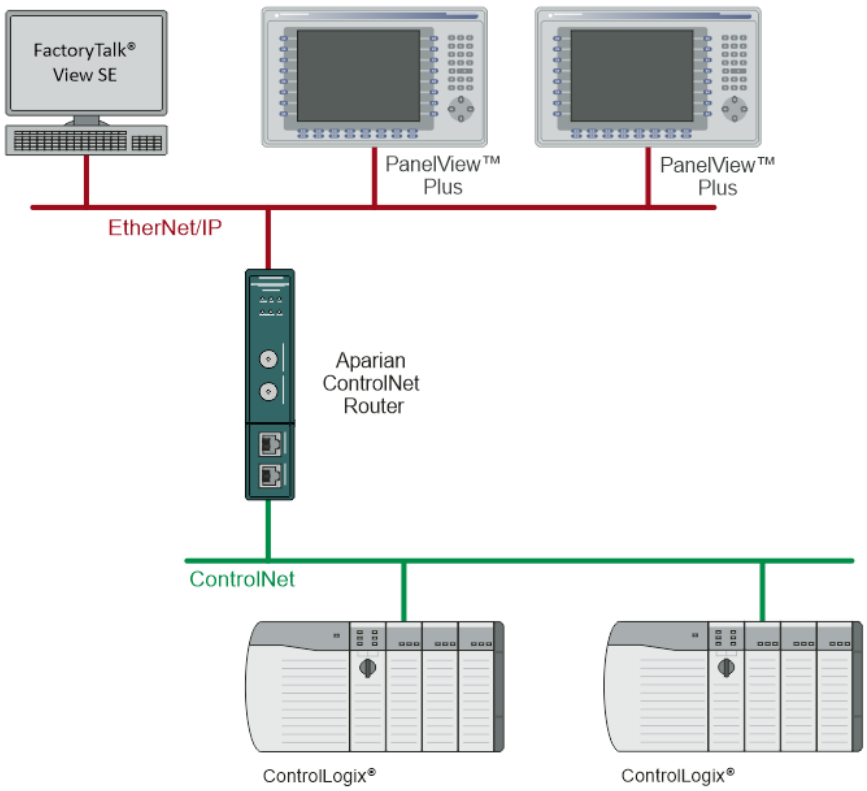

Figure 1.2. - Example of a typical network setup in PLC Emulation mode

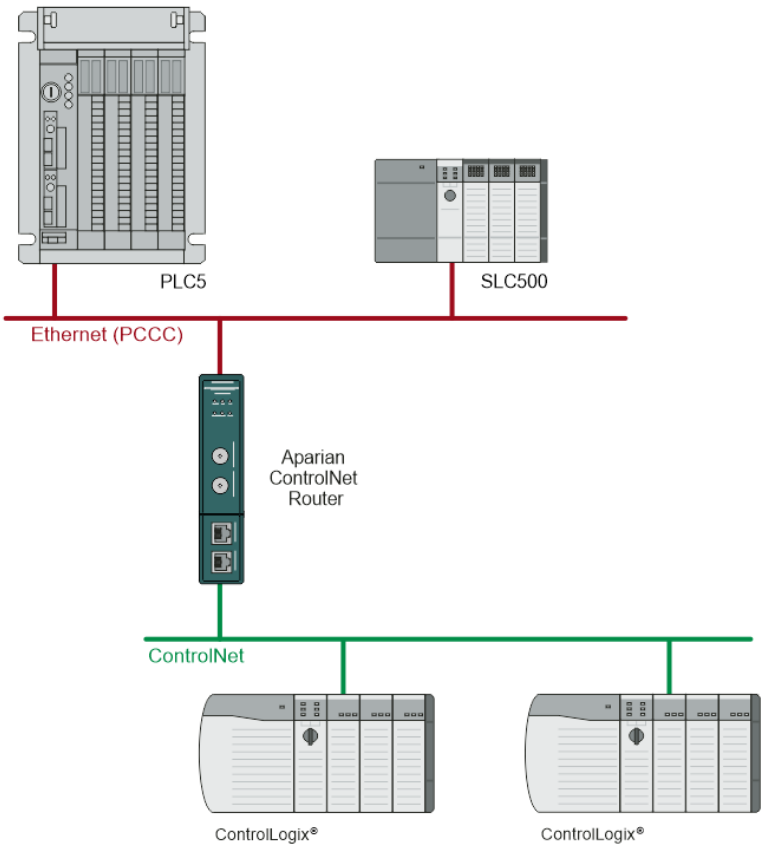

Figure 1.3. - Example of a PLC5/SLC500 Messaging in PLC Emulation mode

EtherNet/IP Target to ControlNet IO (Scheduled ControlNet)

When ControlNet Router is configured as a EtherNet/IP Target and ControlNet Originator, a controller (e.g. Logix Controller) can own the ControlNet Router via EtherNet/IP Class 1 while the ControlNet Router, in turn, owns ControlNet IO using Scheduled ControlNet.

The data from the controller (e.g., Logix Controller) can be exchanged with the ControlNet Router using the EtherNet/IP Class 1 input and output assembly. This data, in turn, can be mapped to any of the configured Scheduled ControlNet IO input and output assemblies being owned by the ControlNet Router.

The ControlNet Router can also exchange data with ControlNet devices using the Explicit Messaging Map. A CIP message with specific service, class, instance, and attribute can be configured to execute at a configured rate with the data being stored in the internal data space (IDS).

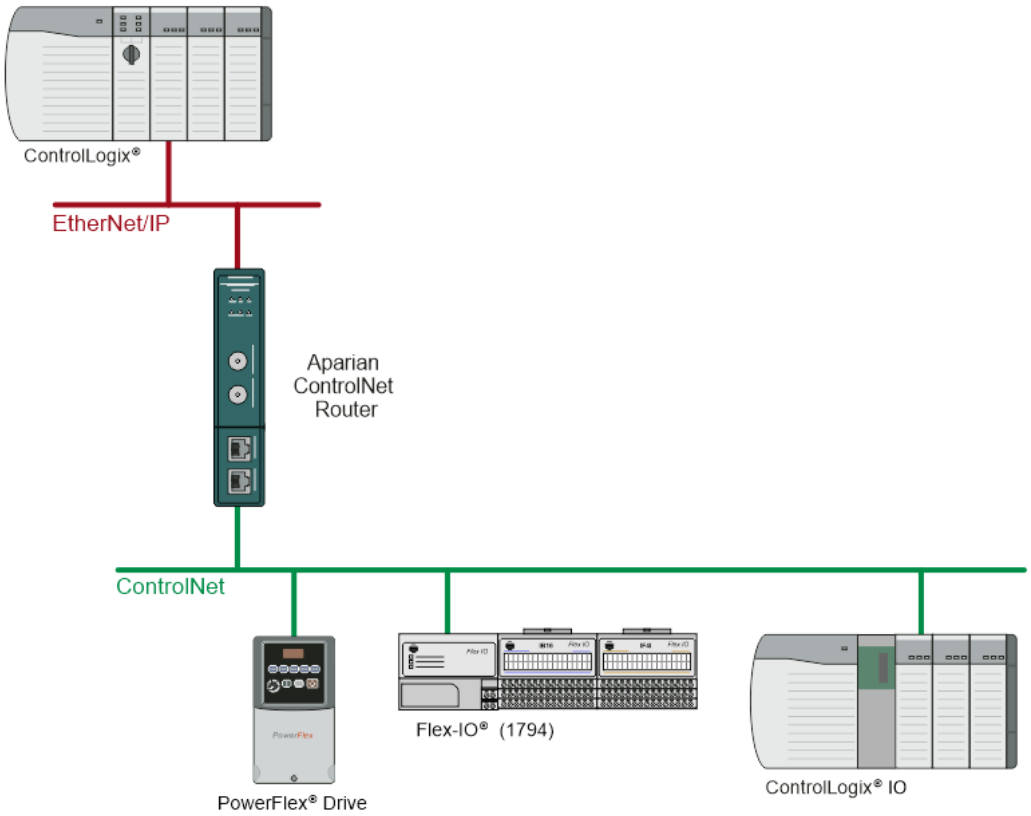

Figure 1.4 – Typical Setup for EtherNet/IP Target to ControlNet IO

Modbus TCP Slave to ControlNet IO (Scheduled ControlNet)

When ControlNet Router is configured as a Modbus TCP Slave and ControlNet Originator, Modbus TCP Master and read and write data to the ControlNet Router internal Modbus Registers while the ControlNet Router owns ControlNet IO using Scheduled ControlNet.

The data from the Modbus TCP Master can be mapped to any of the configured Scheduled ControlNet IO input and output assemblies being owned by the ControlNet Router.

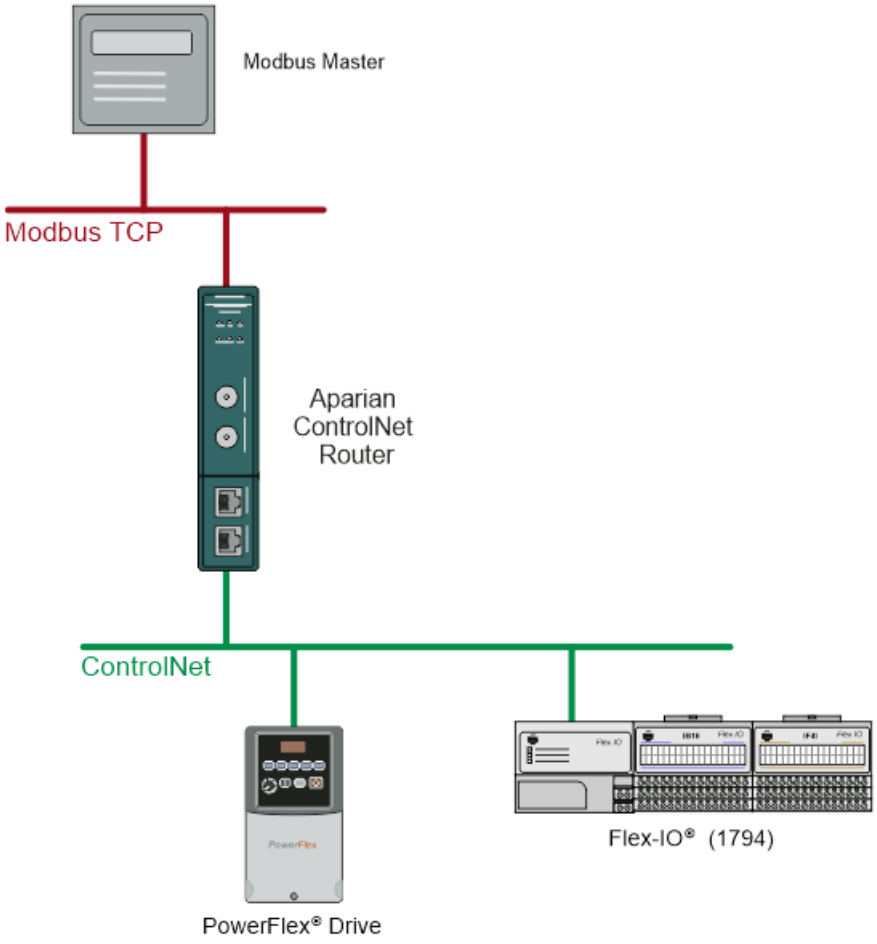

Figure 1.5 – Typical Setup for Modbus TCP Slave to ControlNet IO

ControlNet Target (Scheduled) to EtherNet/IP IO (Class 1)

When ControlNet Router is configured as a ControlNet Target and EtherNet/IP Originator, a controller (e.g. Logix Controller) can own the ControlNet Router via Scheduled ControlNet (e.g. via 1756-CNB/R) while the ControlNet Router owns EtherNet/IP IO using a class 1 connection.

The data from the controller (e.g., Logix Controller) can be exchanged with the ControlNet Router using the Scheduled ControlNet input and output assembly. This data, in turn, can be mapped to any of the configured Class 1 EtherNet/IP IO input and output assemblies being owned by the ControlNet Router.

The ControlNet Router can also exchange data with EtherNet/IP devices using the Explicit Messaging Map. A CIP message with specific service, class, instance, and attribute can be configured to execute at a configured rate with the data being stored in the internal data space (IDS).

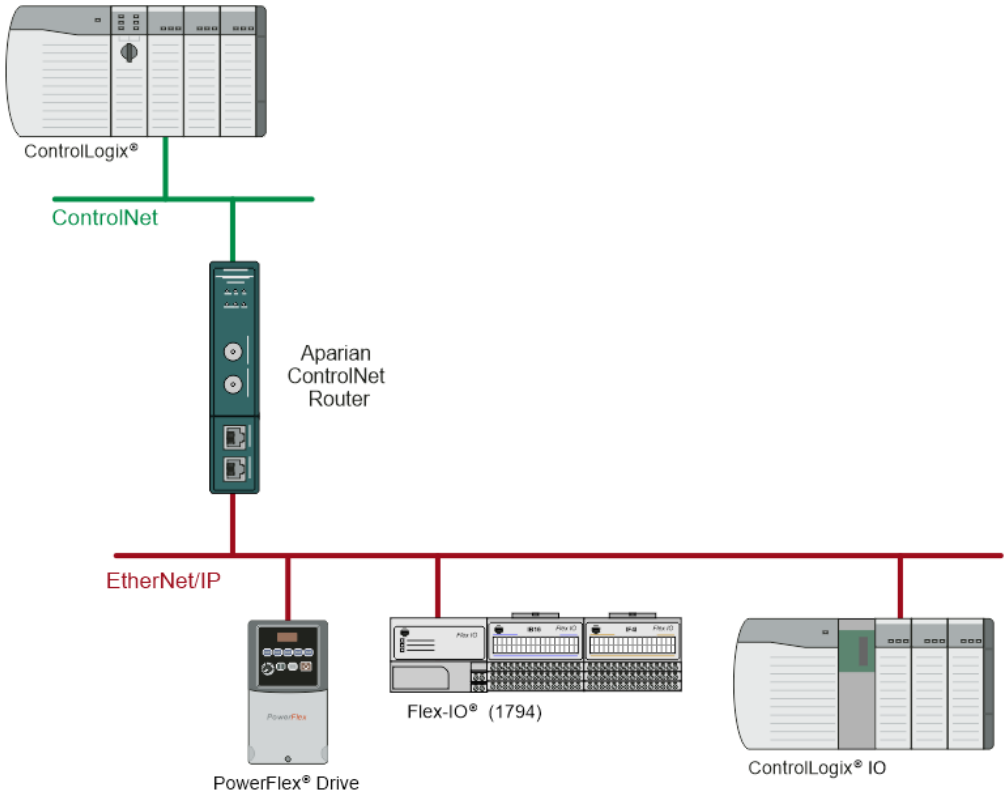

Figure 1.6 – Typical Setup for ControlNet Target to EtherNet/IP IO

CONTROLNET TARGET (SCHEDULED) TO MODBUS TCP SLAVES

When ControlNet Router is configured as a ControlNet Target and Modbus TCP Master, a controller (e.g. Logix Controller) can own the ControlNet Router via Scheduled ControlNet (e.g. via 1756-CNB/R) while the ControlNet Router exchanges data with multiple Modbus TCP Slaves.

The data from the controller (e.g., Logix Controller) can be exchanged with the ControlNet Router using the Scheduled ControlNet input and output assembly. This data, in turn, can be

mapped to any of the Modbus TCP Slaves being written to or read from by the ControlNet Router.

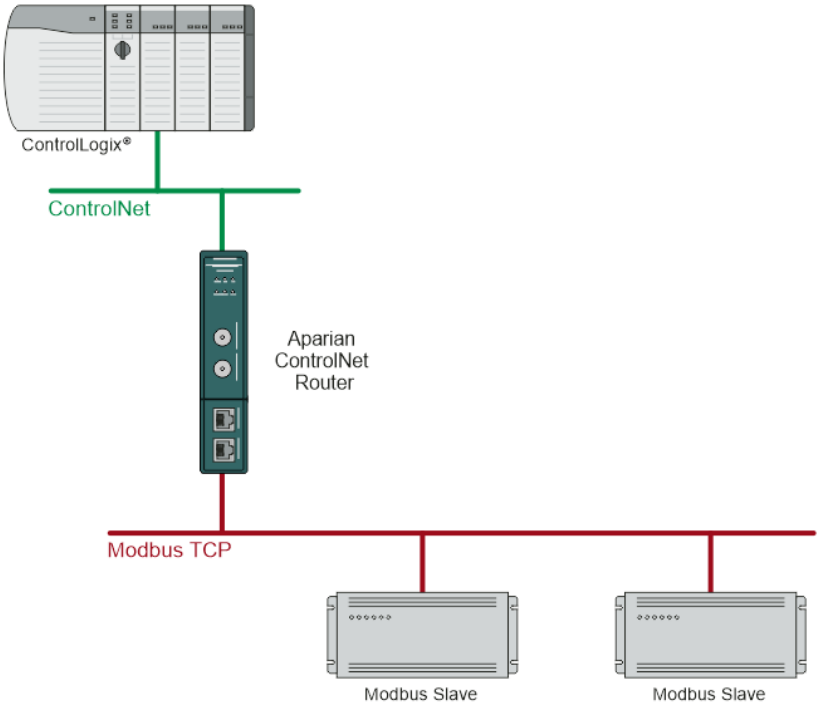

Figure 1.7 – Typical Setup for ControlNet Target to Modbus TCP Slaves

2. TECHNICAL SPECIFICATIONS

2.1. DIMENSIONS

Below are the enclosure dimensions as well as the required DIN rail dimensions. All dimensions are in millimetres.

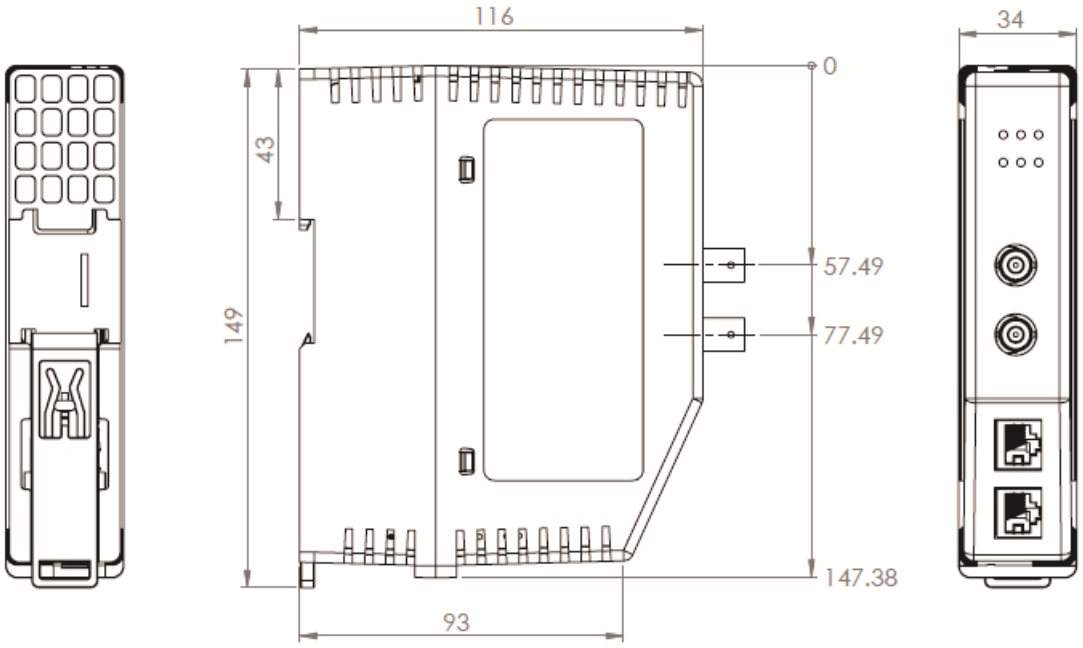

Figure 2.1 – ControlNet Router enclosure dimensions

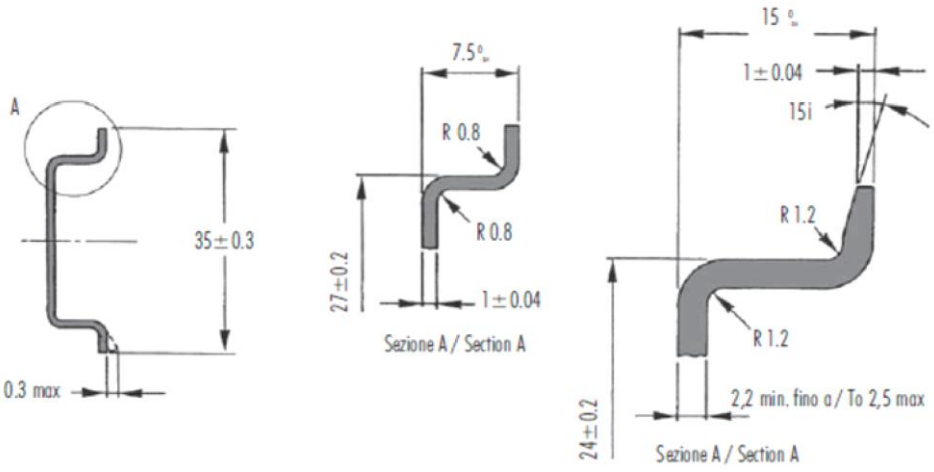

Figure 2.2 - Required DIN Rail dimensions

2.2. ELECTRICAL

Specification	Rating
Power requirements	Input: 10 – 32V DC, (85 mA @ 24 VDC)
Power consumption	2W (max)
Connector	3-way terminal
Conductors	24 – 18 AWG
Enclosure rating	IP20, NEMA/UL Open Type
Temperature	-20 – 70 °C
Earth connection	Yes, terminal based
Emissions	IEC61000-6-4
ESD Immunity	EN 61000-4-2
Radiated RF Immunity	IEC 61000-4-3
EFT/B Immunity	EFT: IEC 61000-4-4
Surge Immunity	Surge: IEC 61000-4-5
Conducted RF Immunity	IEC 61000-4-6

Table 2.1 - Electrical specification

2.3. ETHERNET

Specification	Rating
Connector	RJ45
Conductors	CAT5 STP/UTP
ARP connections	Max 100
TCP connections	Max 100
CIP connections	Max 50
Communication rate	10/100Mbps
Duplex mode	Full/Half
Auto-MDIX support	Yes
Embedded switch	Yes, 2 x Ethernet ports
Device Level Ring (DLR)	Supported
Network Time Protocol (NTP)	Supported

Table 2.2 - Ethernet specification

2.4. CONTROLNET

Specification	Rating
Connectors	2 x BNC connectors (ControlNet A and B).
Redundant ControlNet	Supported
Conductors	Quad shield RG-6 coaxial cable
Routing Supported (RSLogix programming)	Yes

Table 2.3 – ControlNet specification

2.5. CONTROLNET TARGET

Specification	Rating
Scheduled Connection Size	Max Input Size – 408 bytes (400 bytes mapped data) Max Output Size – 404 bytes (400 bytes mapped data)
Unscheduled Routed Client Max	40
Scheduled Connection Count	1

Table 2.4 – ControlNet Target specification

2.6. CONTROLNET ORIGINATOR

Specification	Rating
Scheduled Connection Max Count (Hardware)	10
Scheduled Connection Max Data (Hardware)	**Input Connection Data** 500 bytes per connection **Output Connection Data** Total of 277 bytes for 1 connection. Total of 269 bytes for 2 connections. Total of 261 bytes for 3 connections. Total of 253 bytes for 4 connections. Total of 245 bytes for 5 connections. Total of 237 bytes for 6 connections. Total of 229 bytes for 7 connections. Total of 221 bytes for 8 connections. Total of 213 bytes for 9 connections.

	Total of 205 bytes for 10 connections.
Scheduled Connection Max Count (Software)	30
Scheduled Connection Max Data (Software)	**Input Connection Data** 500 bytes per connection **Output Connection Data** 500 bytes per connection
Explicit Unscheduled Connection Max	10
Multiple ControlNet Router Connection Originators	Supported

Table 2.5 – ControlNet Originator specification

2.7. CONTROLNET BRIDGE

Specification	Rating
Scheduled Connection Max Count *connections can be Rack Optimized	30
Scheduled Connection Max Data	**Input Connection Data** 500 bytes per connection **Output Connection Data** 500 bytes per connection

Table 2.6 – ControlNet Originator specification

2.8. PCCC

Specification	Rating
Max PCCC Connections	10
Max PCCC Payload	1000 bytes

Table 2.7 – PCCC specification

2.9. ETHERNET/IP TARGET

Specification	Rating
Class 1 Connection Size	Max Input Size – 500 bytes (492 bytes mapped data) Max Output Size – 496 bytes (492 bytes mapped data)
Class 1 Connection Count	1

Class 3 Messaging Supported	Yes
UCMM Messaging Supported	Yes

Table 2.8 – EtherNet/IP Target specification

2.10. ETHERNET/IP ORIGINATOR

Specification	Rating
Class 1 Cyclic Connections Supported	Yes
Class 3 / UCMM Connections Supported	Yes
Class 1 Connection Count	16
Class 3 / UCMM Target Device Count	10
Class 3 / UCMM Mapping Count	50
Direct-To-Tag Logix Support	Yes

Table 2.9 – EtherNet/IP Originator specification

2.11. MODBUS TCP MASTER

Specification	Rating
Modes Supported	Modbus TCP
Max Modbus Slave device	20
Max Modbus Mapping	100
Mapping Ranges	Holding Register 0 – 65535 Input Register 0 – 65535 Input Status 0 – 65535 Coil Status 0 – 65535
Base Offset	Modbus (Base 0) PLC (Base 1)
Configurable Modbus TCP Port	Yes
Data Re-formatting Supported	BB AA BB AA DD CC CC DD AA BB DD CC BB AA

Table 2.10 – Modbus Master specification

2.12. MODBUS TCP SLAVE

Specification	Rating
Modes Supported	Modbus TCP
Mapping Ranges	Holding Register 0 – 65535 Input Register 0 – 65535 Input Status 0 – 65535 Coil Status 0 – 65535
Base Offset	Modbus (Base 0) PLC (Base 1)
Configurable Modbus TCP Port	Yes

Table 2.11 – Modbus Slave specification

2.13. CERTIFICATIONS

Certification	Mark
CE Mark	
RoHS2 Compliant	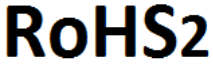
ODVA Conformance	 * F/W 1.001
UL Mark File: E494895	 CLASS 1, DIV 2, GROUPS A, B, C, D
ATEX	

	II 3 G Ex ec IIC T5 -20°C ≤ Ta ≤ 70 °C
UKCA	

Table 2.12 – Certifications